passion. create. smile.

Aster 6/10KT

User Manual

UPCMTOP960HASCG01B
UPCMTOP910KASCG01B

Manual de utilizare

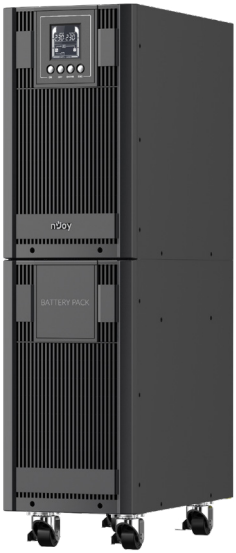

268.20.22.0

Before using this product, carefully read all product documentation and retain it for future reference.

Thank you for purchasing our products!

Please read this manual before using the product.

nJoy is a brand of power and backup protection products that create solutions for multiple levels of environment complexity, residential to industrial.

This UPS will protect your electronic equipment from physical damage and will provide emergency battery backup power to prevent data loss in the event of power problems.

1 Package contents

- ✓ UPS unit
- ✓ User manual
- ✓ USB cable

2 Introduction

This On-Line series is an uninterruptible power supply incorporating double-converter technology. It provides perfect protection specifically for computer equipments, communication servers, and data centers.
The double-converter principle eliminates all mains power disturbances. A rectifier converts the alternating current from the mains power to direct current. On the basis of this DC voltage, the inverter generates an AC sinusoidal voltage, which constantly supplies the loads. In the event of power failure, the maintenance-free batteries power the inverter.
This manual covers the UPS listed as follows. Please confirm whether it is the model you intend to purchase by performing a visual inspection of the Model No. on UPS.

3 Product overview

Front View

Aster 6KT/10KT

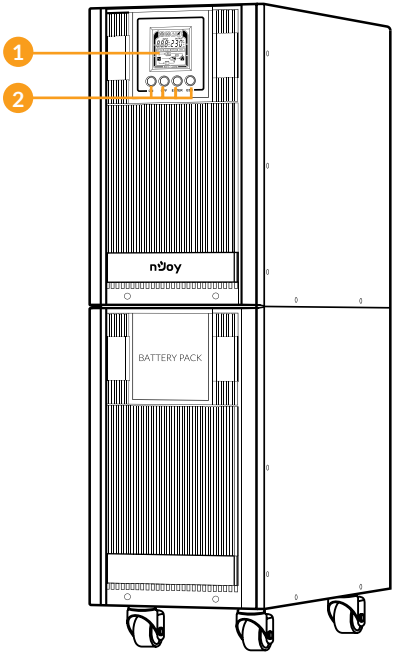

Fig.1-1

1. **LCD display**
2. **Settings buttons**

* **For details please refer to - page 10 chapter 6.2. Button functions**

English

Română

Back View

Aster 6KT/10KT

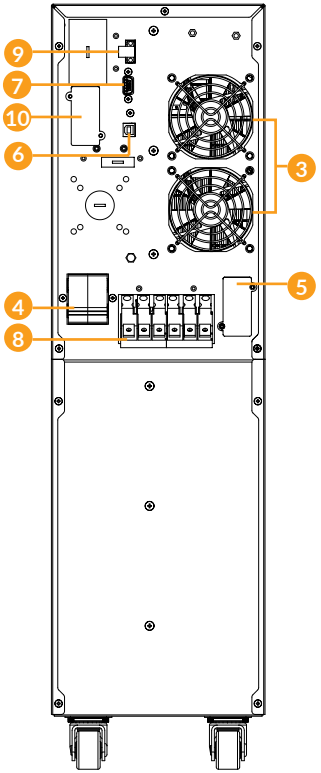

Fig.1-2

3. **Fans.**
4. **Input Circuit Breaker:**The circuit breaker provides optimal overload protection.
5. **Battery input Connector:** Use this input Connector to daisy chain the next Battery module.
6. **USB port:** This port allows connection and communication from the USB port on the computer to the UPS unit. The UPS communicates its status to the software.
7. **Serial Port:** This port allows connection and communication from the RS232 serial on the computer to the UPS unit. The UPS communicates its status to the software.
8. **Terminal block:** Connect input and output loads.
9. **EPO Connector:** Enables an Emergency Power-Off of the UPS. If EPO terminal is open, the UPS will shutdown immediately.
10. **SNMP/HTTP Network Port:** The SNMP/HTTP port provides remote monitoring and management of your UPS over a network.

4 Description of Commonly Used Symbols

Some or all of the following symbols may be used in this manual. It is advisable to familiarize yourself with them and understand their meaning:

Symbol and Explanation			
Symbol	**Explanation**	**Symbol**	**Explanation**
	Alert you to pay special attention		Caution of high voltage
	Alternating current source(AC)		Direct current source(DC)
	Turn on or turn off the UPS		Protective ground
	Recycle		Do not dispose with ordinary trash

English

Română

5 Installation

The system must be installed and wired only by qualified electricians in accordance with applicable safety regulations!
For safety, please cut off the mains power switch before installation!
When installing the electrical wiring, please note the nominal amperage of your incoming feeder.

5.1. Power Wires Installation

5.1.1. Notes for installation:

1. The UPS must be installed in a location with good ventilation, faraway from water, inflammable gas and corrosive agents.
2. Ensure the air vents on the front and rear of the UPS are not blocked. Allow at least 0.5m of space on each side.
3. Condensation to water drops may occur if the UPS is unpacked in a very low temperature environment. In this case it is necessary to wait until the UPS is fully dried inside out before proceeding installation and use. Otherwise there are hazards of electric shock.

5.1.2. Installation

Use cable cross section and protective device specification:

Model	Aster 6KT	Aster 10KT
Protective earthing conductor Min cross section	6mm² (UL1015 10AWG)	10 mm² (UL1015 8AWG)
Input L, N Min conductor cross section	6mm² (UL1015 10AWG)	10 mm² (UL1015 8AWG)
Input breaker	40A/250Vac	63A/250Vac
Torque for fixing above terminals	3.95~4.97Nm (35~44 1b in)	

1. It is suggested to install an external isolating device against backfeed current between mains input and UPS. After the device is installed, a warning label must be attached to the external AC connector with the following text: RISK OF BACKFEED CURRENT. Isolate the UPS with the isolating device before operating on this circuit, then check for hazardous voltage between all terminals.

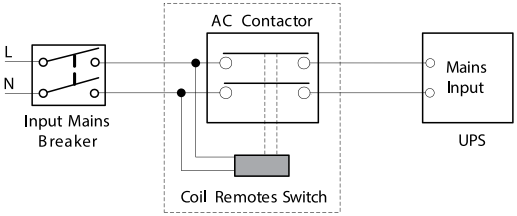

Fig. 2

Typical external isolating device installation

2. No matter the UPS is connected to the mains power or not, the output of the UPS may be electrically live. The parts inside the unit may still have hazardous voltage after turning off the UPS. To make the UPS have no output, turn off the UPS, and cut off the mains power supply, wait the UPS shut down completely, finally cut off the battery connection.
3. Open the terminal block cover located on the rear panel of UPS, please refer to the appearance diagram.
4. Ensure the capacity of mains power supply. Do not use the wall receptacle as the input power source for the UPS, as its rated current is less than the UPS's maximum input current. Otherwise the receptacle may be burned and destroyed.
5. The protective earth ground wire should be installed first according to the following diagram. It is better to use green wire or green wire with yellow ribbon wire.

6. Connect other input and output wires to the corresponding input and output terminals according to the following diagram.

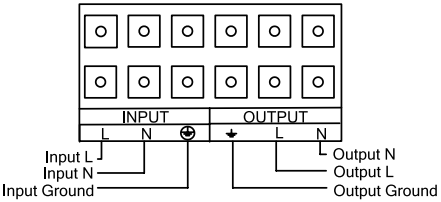

Fig. 3
Input and output terminal block wiring diagram

Note: Make sure that the input and output wires and the input and output terminals are connected tightly.

7. It is requested to use the accessorial terminal splices which can be compacted on the wires tightly, to ensure the connection between the wires and the terminal block is reliable.
8. Install an output breaker between the output terminal of UPS and the load, and the breaker should be with leakage current protective function if necessary.
9. Turn off all the loads first before connecting the load with the UPS, then perform the connection and finally turn on the loads one by one.
10. After completing the installation, please check the wires to make sure all were connected correctly and tightly.
11. Suggest charging the batteries for 8 hours before use. After Installation, turn on the mains power switch and turn the input breaker in the “ON” position, the UPS will charge the batteries automatically. It can also use the UPS immediately without charging the batteries, but the backup time may be less than the standard value.
12. If it is necessary to connect the inductance load such as a electri engine or a laser printer to the UPS, it must be taken into account that this kind of loads could have a huge current spike at the start-up that can exceed the UPS’s capacity and easily trigger the overload protection in the UPS, which will halts the UPS into error state and shuts down the electrical power.

5.2 EPO Connection

EPO (Emergency power off): when the emergency occurs, such as the failure of load, the UPS can cut off the output at once by operating the EPO port manually.

The connection:

Normally the EPO connector is closed with a wire on the rear panel **(Fig.4-4)**, which is supplied in the accessory. Once the connector is open, the UPS would stop the output and enter EPO status **(Fig.4-3)**.

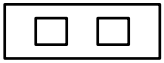

Fig.4-3 Enable the EPO status

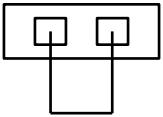

Fig.4-4 Disable the EPO status

To recover to normal status, first EPO connector should be closed **(Fig.4-4)**, and press button **ON** more than 1 second to clear EPO status, then UPS would stop alarm and recover to Bypass model. And UPS needs be turned on by manual operation.

5.3 Battery installation

To install batteries in UPS, you will find the following cables in product box:

No.	Description	Length (cm)	Quantity (number of pieces)	Remarks
1	10 AWG cable (Black)	10	8	F2 to F2 connector
2	10 AWG cable (Black)	17	1	F2 to F2 connector
3	10 AWG cable (Black)	23	2	F2 to F2 connector
4	10 AWG cable (Black)	34	1	F2 to F2 connector
5	10 AWG cable (Black)	36	1	F2 to F2 connector
6	10 AWG cable (Red)	36	2	F2 to F2 connector

Please follow steps below to install batteries inside Aster 6KT / Aster 10KT UPS:

Step 1: Remove side panels and battery holders from each side of the UPS

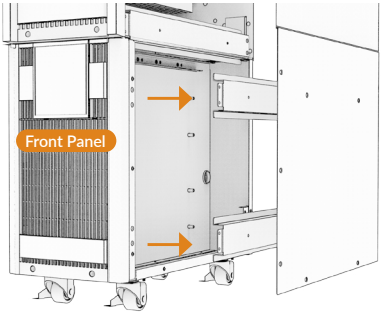

Step 2: Place 4 batteries on the left side of the UPS (as you look from behind the UPS) as shown in picture below.

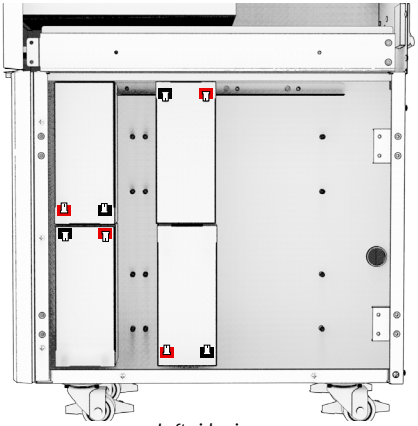

Left side view

Step 3: Connect the batteries as shown in below picture.

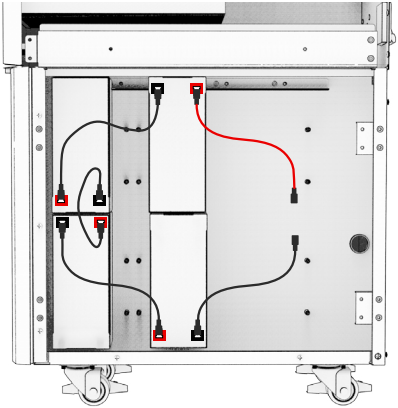

Step 4: Turn the 4 batteries placed initially and add two more batteries, as in the picture below

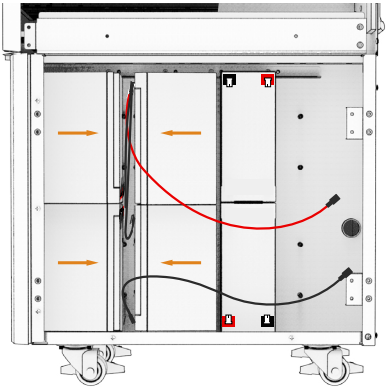

Step 5: Connect the batteries to each other as in the diagram below:

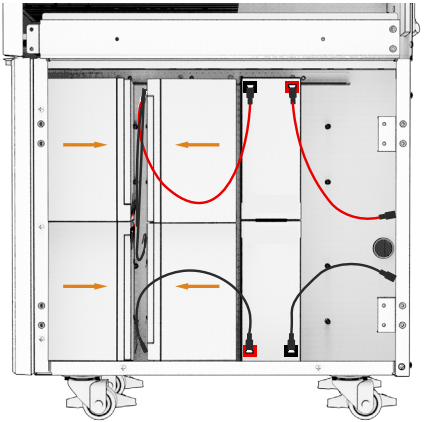

Step 6: Pass the cable through the passage slot F, as in the photo below

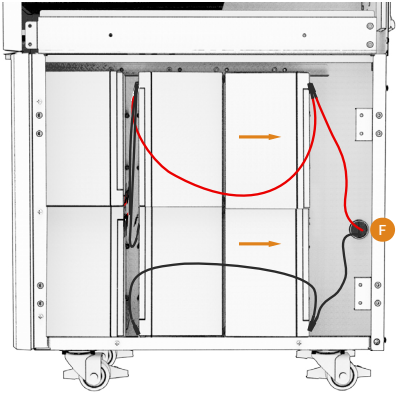

Step 7: Place back the holders af the batteries

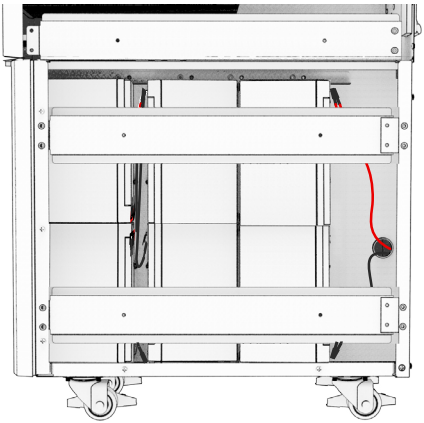

Step 8: On the right side of the UPS, put 10 batteries as shown in the picture below

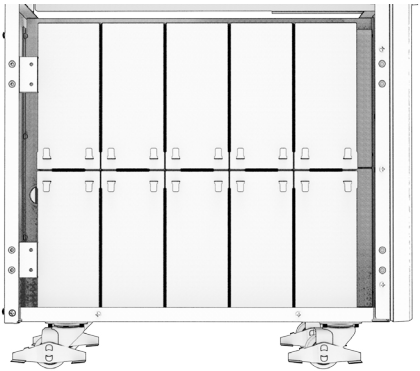

Right side view

Step 9: Connect the batteries with cables as shown in the picture below:

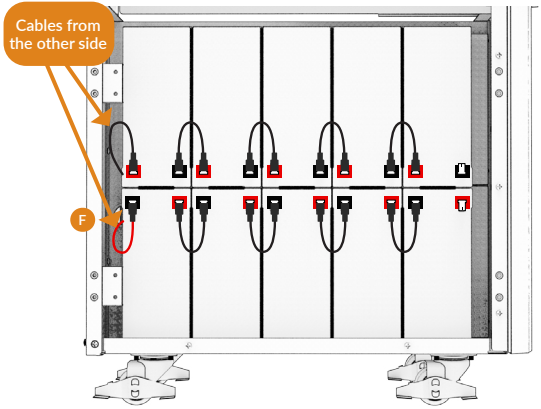

Step 10: Connect the first two batteries (as you look from the front of the UPS) with the cables connected to UPS as shown in below picture.

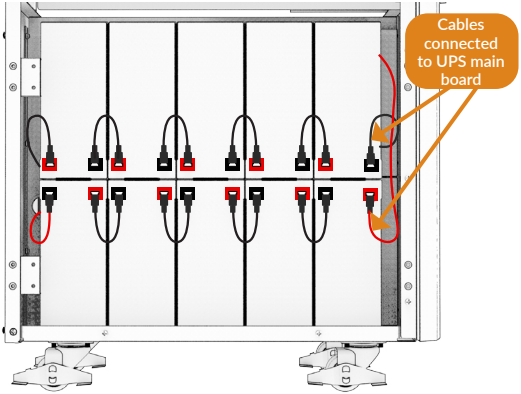

Step 11: Place back battery holders, and after that, side panels of the UPS

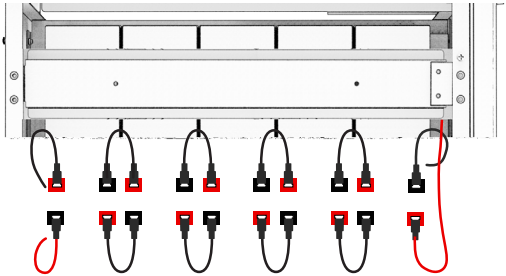

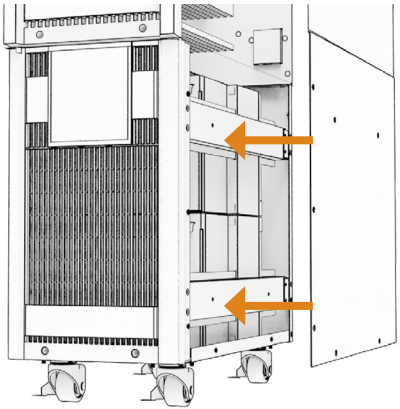

6 Operation

6.1 Display Panel

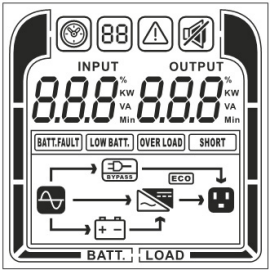

6.2. Button functions

Button	Operation Description
ON	Press this button to turn on UPS. In line mode, ECO mode, or converter mode, press the "ON" button for 5 seconds to activate the battery test.
OFF	Press this button to turn off UPS.
ENTER	Press this button for 5 seconds to get into setting mode while in bypass mode, or standby mode. In setting mode, press this button to confirm selection, or press this button for long time to exit setting mode and saving changes. Press this button to scroll up in the LCD menu.
ESC	In setting mode, press this button to display next selection, or press this button for long time to exit setting mode without saving changes. Press the "ESC" button for 5 seconds to disable and enable buzzer alarm. Press this button to scroll down in the LCD menu.
ENTER + ESC	Switch to bypass mode: When the main power is normal, press these two buttons simultaneously for 5 seconds, then UPS will enter to bypass mode.

6.3. LCD Operation

Operation mode	Description	LCD display
Line mode	Utility will provide energy to loads. It will also charge the battery at the same time.	
Battery mode	The unit will provide output power from battery.	
ECO mode	When the input voltage is within voltage regulation range, UPS will bypass voltage to output for energy saving.	
Bypass mode	When the input voltage is within bypass voltage range, UPS will bypass voltage to output.	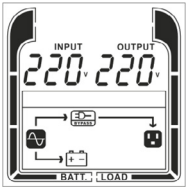

Converter mode	When input frequency is within 40Hz to 70Hz, the UPS can be set at a constant output frequency, 50Hz or 60Hz.	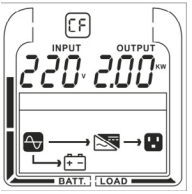
Standby mode	Utility will charge the battery and no output voltage until switch on the UPS.	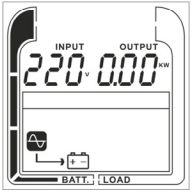
Warning mode	The UPS is warning because of overload.	
Fault mode	The UPS goes to fault mode because output is short.	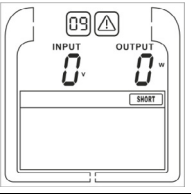

LCD displays 6 pages in total:

1(default)	Left: AC INPUT(Voltage) V Right: OUTPUT(Voltage) V	
2	Left: INPUT(Frequency) Hz Right: OUTPUT(Frequency) Hz	
3	Left: W load percent (%) Right: OUTPUTXXX KW	
4	Left: VA load percentage (%) Right: OUTPUTXXX KVA	

English

Română

5	Left: Battery capacity percentage (%) Right: Battery voltage(V)	
6	Left: Backup Time(Min) Right: Battery voltage(V)	

LCD SETTING CONFIGURATION

There are 22 UPS settings that can be configured by the user.

1. Press and hold the "ENTER" button for 5 seconds to activate the setting mode.

The first configuration parameter will be displayed on the LCD screen. Note: The manual settings programming mode can ONLY be invoked while UPS is in Bypass mode or Standby mode. To make UPS on Standby mode or Bypass mode, connect utility power to UPS and do not turn on UPS.

2. Press the "ENTER" button to select the setting you want to configure.

3. Press the "ESC" buttons to scroll through the different parameters and select the parameter you want.

4. Press the "ESC" button for 5 seconds to cancel and exit setting mode.

5. Press the "ENTER" button for "5." seconds to save all the settings you just do and exit setting mode.

Setting item	LCD Display	Setting
01 Output voltage		You may choose the following output voltage in 01 setting. 208:Present output voltage is 208Vac 220:Present output voltage is 220Vac 230:Present output voltage is 230Vac 240:Present output voltage is 230Vac(default)
02 Output frequency		You may choose the following output frequency in 02 setting. 50:Present output frequency is 50Hz(default) 60:Present output frequency is 60Hz

03 ECO mode*		**0%:** ECO mode disabled. When selected, ECO mode is not allowed(default) **10%:** ECO mode enabled. When selected, ECO mode is activated when the input voltage is within +/-10% of setting output voltage **15%:** ECO mode enabled. When selected, ECO mode is activated when the input voltage is within +/-15% of setting output voltage
04 Bypass output		**DIS:** Bypass output disabled. When selected, Bypass output is not allowed in standby mode. But automatic bypass is acceptable when overload or other fault occurs **ENA:** Bypass output enabled. When selected, Bypass output is activated when the utility power is available even not turn on the UPS(default)

05 Converter mode**		**DIS:** Setting UPS to normal mode(non-CVCF mode).If selected, the output frequency will synchronize with the input frequency within 46~54Hz at 50Hz or within 56~64Hz at 60Hz according to setting program 002.**(default)** **ENA:** Setting UPS to CVCF mode. If selected, the output frequency will be fixed to 50Hz or 60Hz according to setting program 002. But load capacity will be derated by 40%.
06 EPO/ROO***		**EPO:** Enable EPO function, if selected, user can Power-Off in emergency from a remote location.**(default)** **ROO:** Enable ROO function, if selected, user can power ON/OFF from a remote location.
07 EBM Number****		You may set the number of battery package in 07 setting as [0bP]~ [AbP]

English

Română

08 Reserved	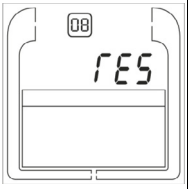	Reserved
09 Buzzer	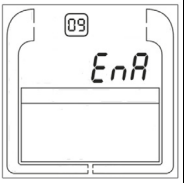	**DIS:** Disabled the buzzer. When selected, buzzer will be silent, but it will beep when alarm or fault occurs. **ENA:** Enabled the buzzer. **(default)**
10 Site wiring fault alarm		**ENA:** Site wiring fault alarm enabled. If selected, UPS will give site wiring fault alarm when line and neutral wiring reverse. **(default)** **DIS:** Site wiring fault alarm disabled. If selected, UPS will not give any alarm when line and neutral wiring reverse.
11 Ambient temperature warning	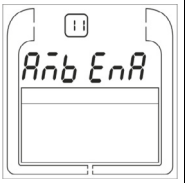	**ENA:** Ambient temperature warning enabled. (default) **DIS:** Ambient temperature warning disabled.

12 DC start		**ENA:** DC start enabled. If selected, UPS can be switched on when DC voltage is available. Utility power is not essential. (default) **DIS:** DC start disabled. If selected, UPS can't be switched on when only DC voltage is available. Utility power is essential when turn on the UPS.
13 Auto Restart		**ENA:** Auto restart enabled. If selected, UPS will auto restart after shutdown if utility power come back. **(default)** **DIS:** Auto restart disabled. If selected, UPS will not auto restart after shutdown even if utility power come back.
14 Automatic overload restart		**ENA:** Automatic overload restart enabled. If selected, UPS will auto restart after overload fault. **(default)** **DIS:** Automatic overload restart disabled. If selected, UPS will not auto restart after overload fault.

15 Short circuit restart		**ENA:** Short circuit restart enabled. If selected, UPS will auto restart after short circuit fault. **DIS:** Short circuit restart disabled. If selected, UPS will not auto restart after short circuit fault. **(default)**
16 Bypass voltage range		Left parameter: Set the acceptable low voltage for bypass. Setting range is 10%/15%/20% of normal output voltage and the default value is 15%. Right parameter: Set the acceptable high voltage for bypass. Setting range is 10%/15% of normal output voltage and the default value is 10%.
17 Bypass frequency range		Set the acceptable frequency range for bypass. Setting range is from 1% to 10% of normal output frequency and the default value is 10%.
18 ECO frequency range	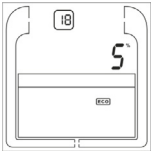	Set the acceptable frequency range for ECO mode. Setting range is from 1% to 10% of normal output frequency and the default value is 5%.

19 Automatic battery tests period		Set the automatic battery tests period. Setting range is from 0 to 45days and the default value is 7days.
20 Battery maximum discharge time setting		**0~999:** Set the maximum discharge time from 0 to 999minutes.UPS will shut down to protect battery after discharge time arrives. The default value is 999min. **DIS:** Disable battery discharge protection and backup time will depend on battery capacity.
21 Ext. Bat Type		**STD:** The battery type is standard.UPS will calculate battery capacity and discharge time.(default) **CUS:** The battery type is customed.UPS can't calculate battery capacity and discharge time.
22 Restore default setting		**NO:** Not restore default setting for the UPS.**(default)** **YES:** Restore default setting for the UPS.UPS need shut down.

*) When operating in ECO Mode, the efficiency of UPS is higher than that in online mode, but transfer time should not be 0ms.

**) When operating in Converter Mode, the frequency of output should be always 50Hz or 60Hz, but load capacity will be derated by 40%.

*) This function would be set as 0% when Converter Mode is enabled.

**) UPS has no bypass when Converter Mode is enabled.

***) ROO (Remote On/Off): If ROO is enabled, UPS can be turn on/off by the ROO port. If ROO port is disconnected, UPS will be turned off. If ROO port is connected, UPS will be turned on when the utility is normal

****) This setting is disabled and the input value will be ignored.

7 Special Function

The series UPS has some special functions, which could satisfy some special application of user. And the functions have own features, please contact your local distributor for further information before using the function.

7.1 ECO function

Brief introduction of ECO function:

If ECO function is set to enable, after the UPS is turned on, the power used by the load is directly supplied from the mains power via internal filter while the utility power is in normal range, so the economy mode could be gained in ECO mode. Once the mains power is outsite the ECO voltage range or abnormal, the UPS would transfer to Line mode or Battery mode and the load is supplied continuously.
The great virtue is overall high efficiency≥96% of UPS, to save power for user.

But the disadvantage is:

1. The load can't be protected as well as in Line mode, when the load is directly supplied from the mains;
2. The transfer time of UPS output from ECO mode to Battery mode is about 10ms.

So the function is not suitable to some sensitive loads, and the regions where the mains power is unstable.

Set the function:

The function could be enabled through the LCD setting.

7.2 Converter Function

Brief introduction of Converter function:

In converter mode, the UPS would free run with fixed output frequency (50Hz or 60Hz). Once the mains power is loss or abnormal, the UPS would transfer to Battery mode and the load is supplied continuously. The great virtue is the output frequency is fixed, which is required by some very sensitive loads. But the disadvantage is the load capacity of UPS should be derated to 60% in converter mode.

Set the function:

The function could be enabled through the LCD setting.

8 Trouble Shooting

If the UPS system does not operate correctly, first check the operating information on the LCD display. Please attempt to solve the problem using the table below. If the problem still persists, consult your dealer.

8.1 Trouble Shooting According to Warning Indication

Warning code	Problem Displayed	Possible cause	Remedy
51	Site fail	The ground wire is disconnected, or phase and neutral conductor at input of UPS system are reversed	Check the Ground wire status; Reverse mains power wiring
53	Fuse open	Input fuse break	Check the input fuse status
56	Battery low	Battery Volt/Cap/Remain Time is low	When audible alarm sounding every second, battery is almost empty

59	Battery open	Battery is disconnect	Do the battery test to confirm; Check the battery bank is connected to the UPS; Check the battery breaker is turn on
60	Over Charge	Battery is over charged	The UPS will turn off the charger until the battery voltage is normal
61	Charger fail	The charge fails	Consult dealer
64	Over Load	Over Load	Check the loads and remove some non-critical loads; Check if some loads are failed.
66	EPO active	EPO connector is open	Check the EPO connector status.
68	Over Temperature	Inside temperature of UPS is too high	Check the ventilation of UPS and the ambient temperature
69	Fan warning	Fan blocked or disconnected	Check the fan status
94	Input Soft Fail	Input Soft Fail	Consult dealer
95	Model pin error	model pin error	Consult dealer
96	Amb NTC abnormal	The ambient temperature is too high	Check the environment ventilation
97	Heat Sink NTC Abnormal	Heat Sink NTC Abnormal	Consult dealer

8.2. Trouble Shooting According to Fault Indication

Warning code	Problem Displayed	Possible cause	Remedy
09	Output Short	Output short circuit	Remove all the loads. Turn off the UPS. Check if UPS output and loads is short circuit. Ensure short circuit is removed before turning on again.
14	Over Load	Over Load	Check the loads and remove some non-critical loads; Check if some loads are failed.
16	Neg power fail	The load is pure inductive and capacitive	Remove some non-critical loads; Bypass supplies the load first, ensure there is no overload, then turn on UPS
19	Over Temperature	Inside temperature of UPS is too high	Check the ventilation of UPS and the ambient temperature.
18	Fan fail	Fan blocked or disconnected over time	Check the fan status.
17	Back feed	Output voltage is returned to input	Consult dealer
05	DC short	Bus short	Consult dealer
02	DC Over	Bus Over Voltage	Consult dealer
03	DC Under	Bus Under Voltage	Consult dealer
04	DC Unbalance	Bus Unbalance	Consult dealer
01	DC soft fail	Bus Soft start fail	Consult dealer
06	Output soft fail	Output Soft start fail	Consult dealer
08	Output Volt low	Output Volt low	Consult dealer
07	Output volt high	Output volt high	Consult dealer

8.3. Trouble Shooting in Else Cases

Problem	Possible cause	Remedy
No indication, no warning tone even though system is connected to mains power supply	No input voltage	Check the building wiring and input cable; Check if the input breaker is closed.
BYPASS icon flash even though the power supply is available	Inverter not switched on	Press button **ON** to turn on UPS.
BATTERY icon flash, and audible alarm sounding every 1 beep in every 4 seconds	Input voltage and/or frequency are out of tolerance	Check input power source; Check the building wiring and input cable; Check if the input breaker is closed.
Emergency supply period shorter than nominal value	Batteries not fully charged / batteries defect	Charge the batteries for at least 12 hours and then check capacity.



Disposal of Old Electrical & Electronic Equipment

(Applicable in the European Union and other European countries with separate collection systems)

This symbol on the product or on its packaging indicates that this product shall not be treated as household waste.

Instead it shall be handed over to the applicable collection point for the recycling of electrical and electronic equipment.

By ensuring this product is disposed of correctly, you will help prevent potential negative consequences for the environment and human health, which could otherwise be caused by inappropriate waste handling of this product.

The recycling of materials will help to conserve natural resources.

Multumim pentru ca ati ales produsele noastre!

Va rugam cititi cu atentie manualul de utilizare Inainte de a pune in functiune acest produs.

nJoy este un brand de solutii UPS dedicate protectiei si rezervei de energie din diferite medii de utilizare, de la rezidential la industrial.

UPS-ul va protejeaza echipamentele electronice de daune fizice si ofera o baterie de rezerva pentru a preveni pierderile de date in cazul intreruperilor accidentale ale energiei electrice.

1 Continutul cutiei

- ✓ Unitate UPS
- ✓ Manual de utilizare
- ✓ Cablu USB

2 Introducere

Aceasta serie contine surse neintreruptibile de putere on-line si incorporeaza tehnologia cu dublu convertor. Acest produs ofera protectie completa, mai ales computerelor, serverelor si centrelor de date. Principiul dublei-conversii elimina orice distorsiune a curentului de intrare. Un redresor converteste curentul alternativ de la sursa principala de alimentare, in curent continuu. Folosind acest curent continuu (DC), invertorul genereaza curent alternativ (AC), cu forma sinusoidala care va alimenta neintrerupt echipamentele conectate. In cazul in care exista intreruperi de curent, bateriile vor prelua activitatea invertorului. Acest manual acopera anumite modele de UPS dupa cum e prezentat mai jos. Verificati cu atentie si inspectati vizual daca modelul prezentat este acelasi cu cel pe care doriti sa il achizitionati.

3 Prezentarea produsului

Vedere frontala

Aster 6KT/10KT

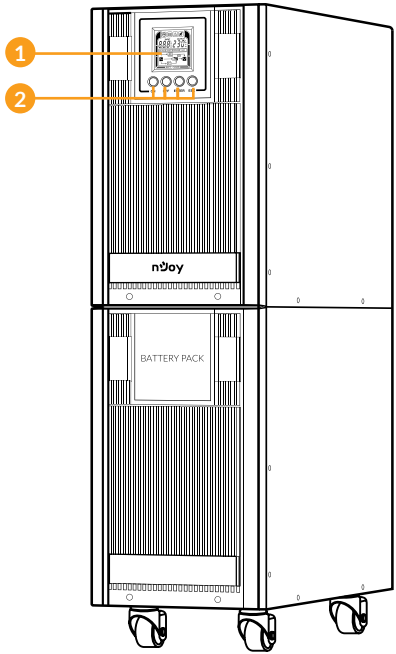

Fig.1-1

1. **Ecran LCD**
2. **Butoane de setare**

* **Pentru detalii va rugam sa consultati - pag. 36 - 6.2. Functiile butoanelor**

English

Română

Vedere din spate

Aster 6KT/10KT

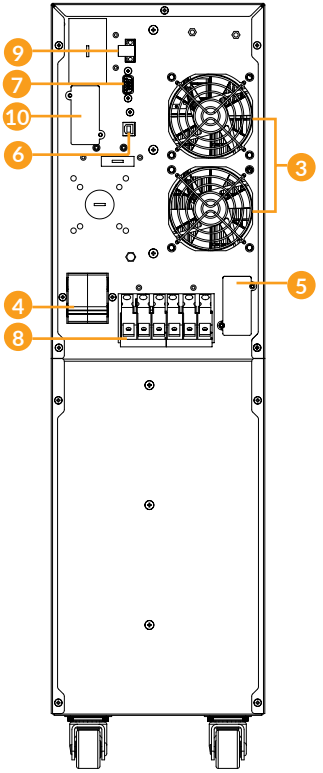

Fig.1-2

3. **Ventilatoare**
4. **Siguranta alimentare (input):** Siguranta asigura protectie la supratensiune.
5. **Conector modul baterii:** Serveste pentru conectarea modulelor de baterii aditionale
6. **Port USB:** Acest port asigura comunicarea dintre computer si UPS. UPS-ul comunica statusul catre software
7. **Port Serial:** Acest port faciliteaza comunicarea dintre portul serial RS232 al computerului si modulul UPS. UPS-ul comunica statusul catre software.
8. **Bloc terminal de conectare:** Conectati sarcinile de intrare si iesire.
9. **Conector EPO:** Actioneaza oprirea de urgenta a UPS-ului. Daca terminalul EPO este deschis, UPS-ul se va opri imediat.
10. **Portul de conectare SNMP/HTTP:** ofera monitorizare de la distanta pentru management al UPS-ului prin intermediul conexiunii la internet.

4 Cele mai utilizate simboluri

Simbolurile urmatoare vor fi utilizate in prezentul manual (partial sau in intregime). Este util sa va familiarizati cu semnificatia lor inainte de ale intalni:

Simbol Semnificatie			
Simbol	**Explicatie**	**Simbol**	**Explicatie**
	Atentie sporita		Atentie sub tensiune!
	Sursa de curent alternativ (AC)		Sursa curent continuu (DC)
	Opreste sau porneste UPS-ul		Protectie cu impamantare
	Recicleaza		Nu aruncati la gunoi menajer

English

Română

5 Instalarea

Sistemul trebuie conectat si pus in functiune de catre electricieni calificati in concordanta cu reglementarile in vigoare.

Pentru a fi in siguranta deconectati alimentarea din panou.

Cand realizati cablajul va rugam sa tineti cont de amperajul nominal al retelei de alimentare electrica.

5.1. Conectarea la tensiune

5.1.1. Note pentru conectare:

1. UPS-ul trebuie instalat intr-un spatiu ventilat, departe de apa sau de alte lichide, substante inflamabile sau de agenti corozivi.
2. Asigurati-va ca orificiile de ventilare din fata si spatele UPS-ului nu sunt blocate si au in jur un spatiu de minim 0.5m.
3. Efectul de condensare poate interveni daca UPS-ul nu este lasat sa se aclimatizeze la temperatura de utilizare sau in spatii foarte reci. In acest caz, UPS-ul trebuie lasat sa se usuce complet la interior inainte de instalare si utilizare. In caz contrar exista pericolul de soc electric.

5.1.2. Instalarea

Folositi diametru sectiunii de cablu mentionat si respectati specificatiile:

Model	Aster 6KT	Aster 10KT
Diamentru sectiune min	6mm² (UL1015 10AWG)	10 mm² (UL1015 8AWG)
Intrare L, N Diamentru sectiune conductor min	6mm² (UL1015 10AWG)	10 mm² (UL1015 8AWG)
Intrerupator intrare	40A/250Vac	63A/250Vac
Cuplu pentru terminale	3.95~4.97Nm (35~44 1b in)	

1. Este indicat sa se instaleze un dispozitiv de izolare impotriva curentilor inversi intre retea si UPS. Dupa ce dispozitivul e instalat, se va lipi o eticheta cu textul RISC DE CURENT INVERS pe conectorul de intrare de la retea. Inainte de a efectua operatiuni ce implica acest circuit, izolati UPS-ul cu dispozitivul respectiv.

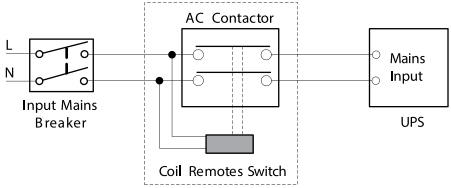

Fig. 2

Modul de instalare cu dispozitiv de izolare

2. Indiferent daca UPS-ul este sau nu conectat la retea, iesirea UPS-ului poate prezenta pericol de electrocutare. Multe parti din interiorul UPS-ului pot prezenta tensiuni periculoase chiar si dupa ce UPS-ul a fost oprit. Pentru a te asigura ca nu exista niciun pericol electric, opriti UPS-ul, deconecteaza-l de la retea, asteptati ca UPS-ul sa se opreasca complet si intrerupeti conexiunea cu bateriile.
3. Deschideti cutia care gazduieste blocul terminal pe spatele UPS-ului, va rugam sa urmariti diagrama.
4. Asigurati-va ca reteaua suporta alimentarea acestui UPS. Nu folositi priza din perete daca este subdimensionata pentru capacitatea acestui UPS, in caz contrar, priza se va arde si distruge complet.
5. Impamantarea se va conecta prima, conform diagramei din **Fig. 3**. Este de preferat utilizarea unui fir de culoare verde sau verde cu galben.

6. Conecteaza firele pentru intrare/iesire la terminalele de intrare/iesire urmarind diagrama de mai jos.

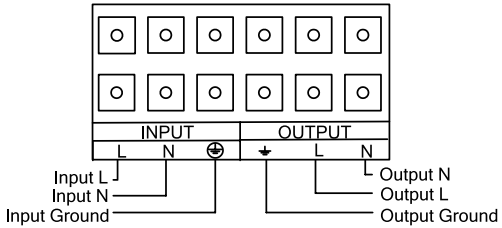

Fig.3

DIAGRAMA DE INTRARE/IESIRE A BLOCULUI TERMINAL

Nota: Asigurati-va ca firele conectate la blocul terminal sunt legate strans pentru un contact cat mai corect.

7. E necesar sa folositi racordurile suplimentare care pot fi stranse perfect pe firele de conectare pentru un contact cat mai bun al blocului terminal.
8. Instalati un intrerupator la iesire intre terminalul de iesire al UPS-ului si incarcarea externa, iar intrerupatorul sa fie cu impamantare.
9. Opriti echipamentele externe inainte de a le conecta la UPS, iar apoi conectati-le si porniti-le pe rand.
10. Dupa ce instalarea este completa, va rugam sa verificati inca o data firele sa fie stranse corect.
11. Recomandam incarcarea bateriilor pentru 8 ore inainte de utilizarea lor. Dupa instalare, porniti curentul de la retea si puneti intrerupatorul de intrare in pozitia “ON”, iar UPS-UL va incarca bateriile automat. UPS-ul poate fi utilizat si imediat dupa instalare, dar timpul de back-up poate fi mai mic decat standard.
12. Daca se conecteaza o sarcina de inductanta, cum ar fi un motor electric sau o imprimanta laser la UPS, trebuie sa se tina cont de faptul ca acest tip de sarcini ar putea avea un curent de intensitate foarte mare la pornire care poate depasi pentru un scurt moment capacitatea UPS-ului, ceea ce va duce la intrarea in protectie a UPS-ului, si oprirea alimentarii electrice

5.2. Conexiunea EPO

Oprirea de urgenta sau EPO este utila atunci cand exista o defectiune sau o eroare a echipamentelor conectate, UPS-ul se poate opri instantaneu din alimentarea sarcinilor conectate prin actionarea manuala a conectorului EPO.

Conexiunea

In mod normal conectorul EPO, pozitionat pe panoul din spate al UPS-ului, este inchis. **(Fig.4-4)** care e livrat ca accesoriu. O data deschis, UPS-ul intrerupe alimentarea si intra in starea EPO **(Fig.4-3).**

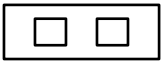

Fig.4-3 Activati functia EPO

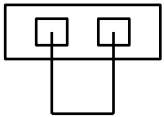

Fig.4-4 Dezactivati functia EPO

Pentru a reveni la starea initiala, conectorul EPO trebuie sa fie inchis **(Fig.4-4)**, si apasat butonul de **ON** pentru mai mult de 1 secunda. UPS-ul va opri alarma si va ramane in modul Bypass. UPS-ul va trebui pornit manual.

5.3 Instalarea bateriilor

Pentru instalarea bateriilor, veti gasi in cutia UPS-ului urmatoarele cabluri:

No.	Descriere	Lungime (cm)	Cantitate	Observatii
1	10 AWG cable (negru)	10	8	Conector F2 to F2
2	10 AWG cable (negru)	17	1	Conector F2 to F2
3	10 AWG cable (negru)	23	2	Conector F2 to F2
4	10 AWG cable (negru)	34	1	Conector F2 to F2
5	10 AWG cable (negru)	36	1	Conector F2 to F2
6	10 AWG cable (Rosu)	36	2	Conector F2 to F2

Urmati pasii de mai jos pentru a instala bateriile in UPS-ul Aster 6KT / Aster 10KT:

Pasul 1: Inlaturati panourile si sinele laterale de pe fiecare parte a UPS-ului

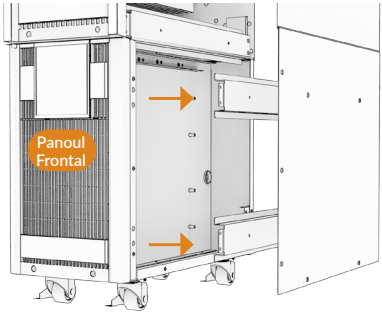

Pasul 2: Asezati 4 baterii pe partea stanga a UPS-ului (cum priviti din spatele acestuia), asa cum se arata in figura de mai jos:

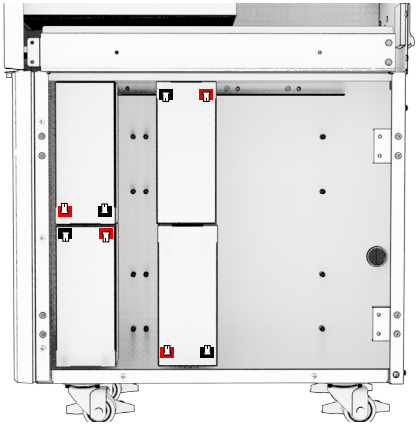

Partea stanga

Pasul 3: Conectati bateriile asa cum se arata in figura de mai jos:

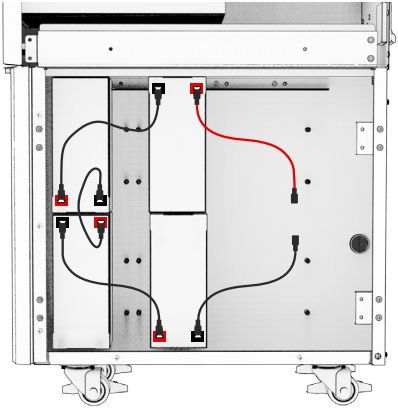

Pasul 4: Intoarceti cele 4 baterii plasate initial si mai adaugati inca doua, la fel ca in imaginea de mai jos:

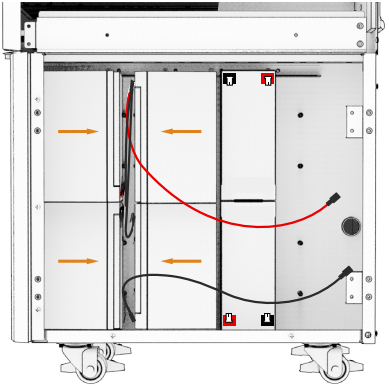

Pasul 5: Conectati bateriile cu cabluri, ca in imaginea de mai jos:

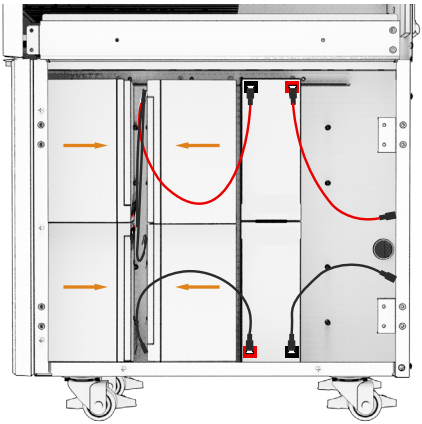

Pasul 6: Treceti cele doua cabluri prin fanta F, de cealalta parte a UPS-ului:

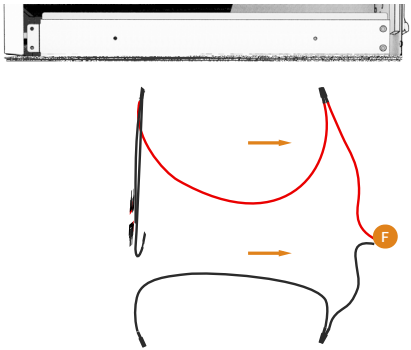

Pasul 7: Asezati sinele de sustinere a bateriilor ca in imagine:

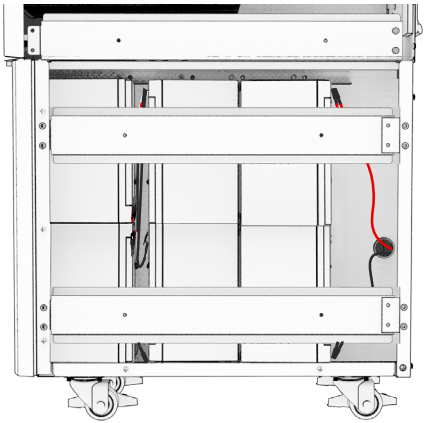

Pasul 8: Asezati 10 baterii pe partea dreapta a UPS-ului, asa cum se vede in imaginea de mai jos:

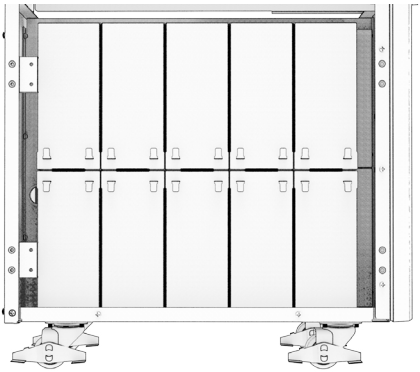

Partea dreapta

Pasul 9: Conectati bateriile ca in imaginea de mai jos:

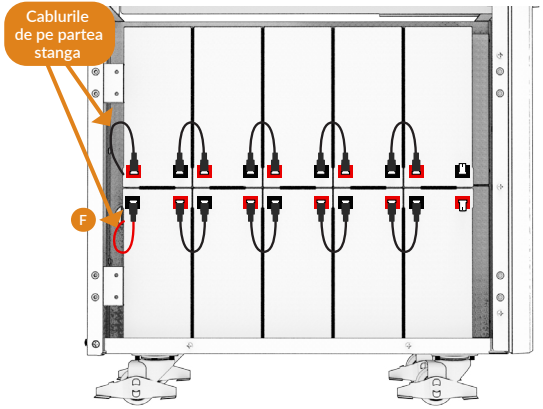

Pasul 10: Conectati primele 2 baterii (cum priviti dinspre partea din fata a UPS-ului) cu cablurile care sunt legate la placa de baza a UPS-ului:

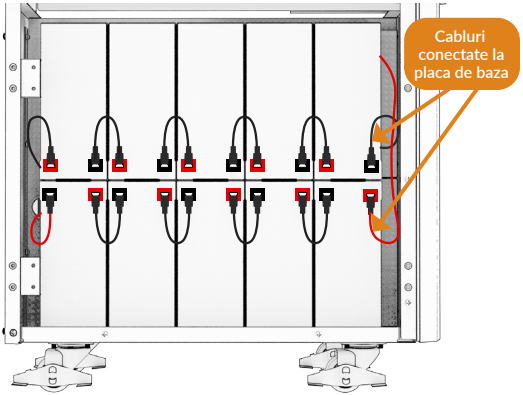

Pasul 11: Fixati bateriile cu sinele laterale si apoi fixati panourile laterale ale UPS-ului.

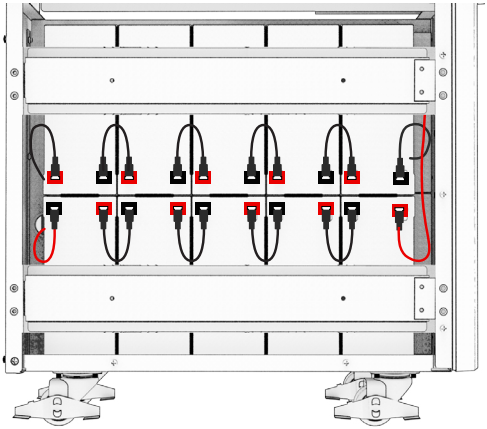

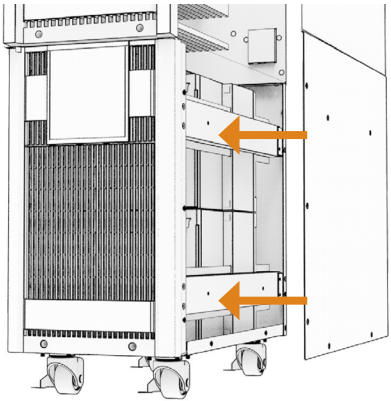

6 Operarea

6.1 Ecranul

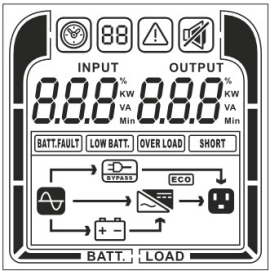

6.2. Functiile butoanelor

ON	Apasa acest buton sa pornesti UPS-ul. In modurile Line, ECO sau convertor, apasa acest buton pentru 5 secunde pentru a activa modul Test baterie.
OFF	Apasa acest buton pentru a opri UPS-ul.
ENTER	Apasa butonul pentru 5 secunde pentru a intra in setari in modurile Bypass si Standby. In setari, apasati acest buton pentru a confirma selectia sau apasati-l pentru a salva selectia si pentru a parasi meniul setari. Apasati acest buton pentru a rasfoi in meniu.
ESC	In modul setari, apasati acest buton pentru a arata urmatoarea optiune sau apasati mai lung pentru a parasi setarile fara a le salva. Apasati timp de 5 secunde pentru a activa/dezactiva alarma. Apasati acest buton pentru a rasfoi in meniu.
ENTER + ESC	Comutati in modul bypass: Cand alimentarea principala este normala, apasati simultan aceste doua butoane pentru 5 secunde iar apoi UPS-ul va intra in modul bypass.

6.3. OPERARE LCD

Mod operare	Descriere	Ecran LCD
Line mode	Reteaua alimenteaza echipamentele conectate. In acelasi timp incarca bateriile.	
Battery mode	Bateriile alimenteaza echipamentele conectate.	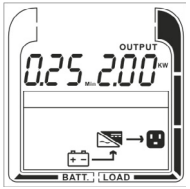
ECO mode	In conditii normale si cand nu exista fluctuatii ale voltajului la intrare, UPS-ul va economisi energie trecand in modul ECO.	
Bypass mode	In conditii normale si cand nu exista fluctuatii ale voltajului la intrare, UPS-ul poate fi comutat in modul bypass.	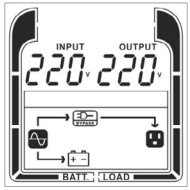

Converter mode	Cand valoarea frecventei de intrare este cuprinsa in plaja 40Hz-70Hz, UPS-ul poate fi setat sa livreze frecventa constanta cu valoarea de 50Hz sau 60Hz.	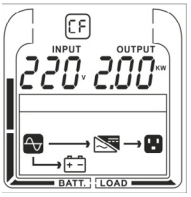
Standby mode	Reteaua va incarca bateriile, dar UPS-ul nu alimenteaza echipamentele conectate.	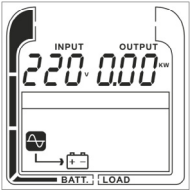
Warning mode	UPS-ul este suprancarcat.	
Fault mode	Mod eroare	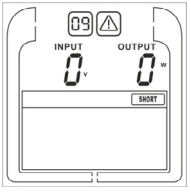

AFISAJE LCD (6 IN TOTAL)

1(Implicit)	Stanga: Intrare AC(Voltaj) V Dreapta: Iesire AC (Voltaj) V	
2	Stanga:AC INPUT (Frecventa) Dreapta:OUTPUT (Frecventa) Hz	
3	Stanga: Nivelul de incarcare in W (%) Dreapta: Iesire XX KW	
4	Stanga: Nivelul de incarcare in VA (%) Dreapta: Iesire XXX KVA	

5	Stanga: Incarcare baterie procente (%) Dreapta: Voltaj Baterie (V)	
6	Stanga: Timp de back-up estimat (Min) Dreapta: Voltaj baterie (V)	

CONFIGURARE ECRAN LCD

Sunt disponibile 22 de setari care pot fi configurate de utilizator:

1. Apasa si mentine apasat butonul ENTER pentru 5 secunde pentru a activa modul setari.

Primul parametru de configurat va fi afisat pe ecran.

NOTA: Modul de setari manuale poate fi activat doar cand UPS-ul este in status Bypass sau Standby. Pentru a pune UPS-ul in aceste 2 moduri, conectati UPS la retea dar nu il porniti.

2. Apasa butonul ENTER pentru a selecta setarea dorita.

3. Apasa butonul ESC pentru a rasfoi printre diferitii parametri disponibili pana ajungi la cel dorit.

4. Apasa butonul “ESC” timp de 5 secunde pentru a anula si a iesi din modul de setare.

5. Apasati butonul “ENTER” timp de 5 secunde pentru a salva toate setarile pe care le-ati facut si pentru a iesi din modul setare.

Setting item	Ecran LCD	Setare
01 Voltaj iesire		Poti selecta una din urmatoarele valori disponibile: 208: Voltajul la iesire este 208Vac 220: Voltajul la iesire este 220Vac 230: Voltajul la iesire este 230Vac 240: Voltajul la iesire este 230Vac (implicit)
02 Frecventa la iesire		Poti selecta una din urmatoarele valori disponibile: 50: Frecventa la iesire este 50Hz (implicit) 60: Frecventa la iesire este 60Hz

03 Mod ECO*		**0%:** Modul ECO este dezactivat. **10%:** Modul ECO este activat. Atunci cand functia este activa iar intrarea este cuprinsa intre +/-10% din tensiunea de iesire setata, atunci modul ECO se activeaza. **15%:** Modul ECO este activat. Atunci cand functia este activa iar intrarea este cuprinsa intre +/-15% din tensiunea de iesire setata, atunci modul ECO se activeaza.
04 Bypass la iesire		**DIS:** Bypass la iesire este dezactivat. Bypass-ul la iesire nu este permis in modul standby. Daca intervine supraincarcarea sau alta eroare atunci UPS-ul va intra in bypass automat. **ENA:** Bypass la iesire activat. La selectie, bypass-ul este activat chiar si in cazul in care exista curent la alimentarea UPS-ului.

05 Mod Convertor**		**DIS:** Setarea UPS-ului in modul normal (mod non-CVCF). Daca este selectat, frecventa de iesire se va sincroniza cu frecventa de intrare in intervalul 46~54Hz la 50Hz sau in intervalul 56~64Hz la 60Hz, conform programului de setare 002 (implicit). **ENA:** UPS-ul este in modul CVCF (Constant Voltage Constant Frequency). Daca este selectata, frecventa de iesire va fi fixata la 50Hz sau 60Hz in conformitate cu programul de setare 002. Dar capacitatea de incarcare va fi redusa cu 40%.
06 EPO/ROO***		**EPO:** Functia EPO activa, in cazul in care intervine o urgenta, UPS se poate inchide complet dintr-un singur loc, de la distanta **(implicit).** **ROO:** ROO Functia ROO activa, o data selectata, utilizatorul poate inchide si deschide UPS-ul de la distanta.
07 Numarul EBM****		Acesta descrie selectia numarului de cabinete de baterii legate la UPS. Acesta este afisat sub forma [0bP]~ [AbP].

08 Reserved	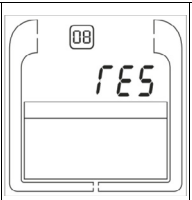	Rezervat
09 Buzzer	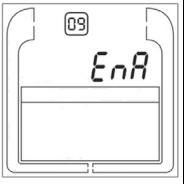	**DIS:** Alarma sonora dezactivata. Cu aceasta setare, alarma va fi silentioasa, dar va fi sonora la aparitia unei erori critice. **ENA:** Alarma activa.**(implicit)**
10 Alarma cablare eronata		**ENA:** Alarma mod de cablare eronat activa. UPS-ul va emite semnale sonore daca faza si nulul sunt conectate invers pe intrarea C.A**(implicit)** **DIS:** Alarma mod de cablare eronat dezactivata. UPS-ul va ignora conectarea inversa a fazei cu nulul pe intrarea C.A
11 Avertis-ment de temperatura ambientala		**ENA:** Avertismentul de temperatura ambientala este activ. **(Implicit)** **DIS:** Avertismentul de temperatura inactiv.

12 DC start		**ENA:** Stare curent continu activat. Daca functia este activata UPS-ul poate fi pornit pe curent continu. Nu este nevoie de curent de la retea.**(implicit)** **DIS:** Stare curent continu dezactivat. Daca functia este dezactivata UPS-ul nu porneste. Este nevoie de curent de la retea.
13 Auto Restart		**ENA:** Auto Restart activ. Daca e selectat, UPS-ul va reporni automat cand exista tensiune la reteaua de alimentare. **(implicit)** **DIS:** Auto Restart dezactivat. UPS-ul nu va reporni, chiar daca exista tensiune la retea.
14 Repornire automata la supraincarcare		**ENA:** O data activata, UPS-ul va reporni automat dupa ce eroarea de supraincarcare a fost rezolvata. **(implicit)** **DIS:** O data dezactivata, UPS-ul nu va reporni automat dupa ce eroarea de supraincarcare a fost rezolvata.

15 Repornire automata dupa scurt-circuit	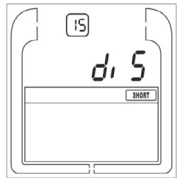	**ENA:** O data activata, UPS-ul va reporni automat dupa ce eroarea de scurtcircuit a fost rezolvata. **DIS:** O data dezactivata, UPS-ul nu va reporni automat dupa ce eroarea de scurt-circuit a fost rezolvata. **(implicit)**
16 Plaja de voltaj in Bypass		**Parametrul din stanga:** Setati cea mai mica valoare acceptabila a voltajului in Bypass. Optiunile sunt 10%, 15%, 20% din valoarea voltajului nominal de iesire, iar valoarea setata implicit este 15%. **Parametrul din dreapta:** Setati cea mai mare valoare acceptabila a voltajului in bypass. Optiunile sunt 10%, 15% din valoarea voltajului nominal de iesire, iar valoarea setata implicit este 10%
17 Plaja de frecventa in Bypass		Stabilirea tolerantei acceptabile a frecventei pentru functionare in mod bypass. Poate lua valori intre 1% si 10% din valoarea normala a frecventei. Setarea implicita este 10%.
18 Plaja de frecventa in ECO:	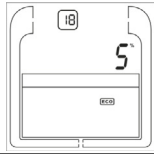	Setati valoarea acceptabila a frecventei in modul ECO. Plaja disponibila este intre 1-10% din valoarea frecventei nominale de intrare, iar valoarea implicita setata este 5%

19 Frecventa testelor de baterie		O data setata, testele de baterie se pot efectua la frecventa dorita, incepand cu 0 pana la 45 zile. Implicit se va efectua la 7 zile.
20 Timp de descarcare maxim al bateriei		**0~999:** Se poate seta un timp de descarcare foarte precis al bateriei, cuprins intre 0-999 min pentru a proteja bateria de descarcare completa. Timpul implicit este 999 min. **DIS:** Dezactivat, timpul de descarcare al bateriei si timpul de back-up va fi influentat doar de capacitatea bateriei.
21 Tipul de baterie	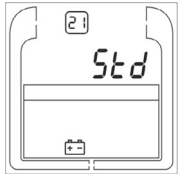	**STD:** Tipul de baterie este standard. UPS-ul poate calcula capacitatea bateriei si timpul de descarcare (implicit). **CUS:** Tipul de baterie este special. UPS-ul nu poate calcula capacitatea bateriei si timpul de descarcare.
22 Revino la setarile implicite		**NO:** UPS-ul nu revine la setarile implicite. **(implicit)** **YES:** UPS-ul revine la setarile implicite. UPS-ul necesita repoprnire.

*) In modul ECO eficienta UPS-ului este mai mare decat in modul on-line, dar timpul de transfer nu este 0ms.

**) In modul Convertor, frecventa de iesire poate fi intotdeauna 50Hz sau 60Hz, dar capacitatea incarcarii va fi diminuata cu 40%.

*) Aceasta setare va avea valoarea 0 in modul Convertor.

**) In modul Convertor UPS-ul nu poate trece in Bypass.

***) ROO (Remote ON/OFF) Cand ROO e activat UPS-ul poate fi pornit/oprit prin acesta functie. Cand portul este deconectat, UPS-ul este oprit. Cand este conectat, UPS-ul va fi pornit cand tensiunea la retea este normala.

****) Aceasta setare este dezactivata, orice valoare introdusa va fi ignorata.

7 Functii Speciale

Seria Aster are functii speciale care pot sustine diferite aplicatii. Va rugam sa contactati distribuitorul local daca doriti mai multe detalii despre aceste functii.

7.1 Functia ECO

Scurta descriere:

Cand functia ECO este activa dupa ce UPS-ul este pus in functiune, puterea furnizata este alimentata direct de la retea, prin intermediul sistemului de filtrare interna, astfel ca eficienta este foarte mare. Cand reteaua furnizeaza valori anormale de tensiune, UPS-ul va trece in modul Line sau Baterie pentru a continua sa alimenteze echipamentele conectate, fara intreruperi.

Cea mai importanta caracteristica este eficienta foarte mare ≥96% care economiseste energia utilizatorului.

Dezavantaje:
1. Echipamentele conectate nu sunt protejate la fel de bine in modul Line, fiind alimentate direct de la retea.
2. Timpul de transfer de la modul ECO la modul de functionare pe baterie este de 10ms.

Aceasta functie nu este potrivita echipamentelor foarte sensibile sau daca in regiune alimentarea cu energie electrica este instabila

Seteaza functia:

Seteaza functia prin intermediul ecranului LCD.

7.2 Functia convertor

Scurta descriere:

In modul convertor, UPS-ul furnizeaza putere direct de la retea cu frecventa de iesire fixa (50Hz sau 60Hz). Cand reteaua furnizeaza valori anormale de tensiune, UPS-ul va face transferul pe modul Baterie Avantajul acestei functii este ca frecventa de iesire este fixa, un plus in cazul echipamentelor extrem de sensibile. Dezavantajul este ca puterea UPS-ului este diminuata la 60%.

Seteaza functia:

Seteaza functia prin intermediul ecranului LCD.

8 DEPANARE

Daca UPS-ul nu functioneaza corect, prima data verificati informatiile afisate pe ecran si incercati sa rezolvati problema utilizand codurile si actiunile care trebuiesc luate din tabelul urmator:

8.1 Depanare dupa codurile de avertisment

Cod Eroare	Eroare Afisata	Cauza Posibila	Actiune
51	Site fail	Impamantarea este deconectata, faza sau nul-ul sunt inversate la intrare	Verificati starea impamantarii, inversati pentru a corecta cablarea la intrare.
53	Fuse open	Siguranta de intrare defecta	Verificati starea sigurantei.
56	Battery low	Capacitatea/ timpul de backup ramas este scazut	Cand alarma suna la fiecare secunda bateria e aproape de epuizare

59	Battery open	Bateria este deconectata	Efectuati un test de baterie. Verificati daca bateriile sunt corect conectate la UPS.
60	Over Charge	Bateriile sunt supraincarcate	UPS-ul va opri chargerul automat pana voltajul bateriilor revine la normal.
61	Charger fail	Nu se Incarca.	Luati legatura cu unitatea de unde ati cumparat echipamentul.
64	Over Load	Supraincarcare	
66	EPO active	Conectorul EPO este deschis	Verificati portul EPO.
68	Over Temperature	Temperatura interioara a UPS-ului este prea mare	Verificati ventilarea UPS-ului sa se efectueze corect sau reduceti temperatura ambientala.
69	Fan warning	Ventilator blocat sau deconectat.	Verificati starea ventilatoarelor.
94	Input soft fail	Input soft fail	Luati legatura cu unitatea de unde ati cumparat echipamentul.
95	Model pin error	Model pin error	
96	Amb NTC abnormal	Temperatura ambientala e prea ridicata	Verificati ventilatia sa se execute corect
97	Heat Sink NTC Abnormal	Eroare a radiatorul modulului NTC	Luati legatura cu unitatea de unde ati cumparat echipamentul.

8.2. Depanare dupa codurile de eroare

Cod Eroare	Eroare Afisata	Cauza Posibila	Actiune
09	Output Short	Scurtcircuit la iesire	Deconectati toate echipamentele de la iesire. Opriti UPS-ul. Verificati unde s-a produs scurtcircuitul si remediati problema inainte sa porniti UPS-ul.
14	Over Load	Supraincarcare	Verificati echipamentele conectate si indepartati-le pe cele neesentiale. Verificati sa nu existe defecte.
16	Neg power fail	Sarcina e pur inductiva sau pur capacitiva	Deconectati echipamentele neesentiale de la prize. Bypass -ul va alimenta sarcinile conectate, asigurati-va ca UPS-ul nu mai este supraincarcat si apoi reporniti-l
19	Over temperature	Temperatura ridicata	Verificati ventilatorele si temperatura ambientala.
18	Fan fail	Ventilator nefunctttional	Asigurati-va ca ventilatorul functioneaza corect.
17	Back feed	Prezenta tensiune inversa	Luati legatura cu unitatea de unde ati cumparat echipamentul.
05	DC short	Scurtcircuit cale CC	
02	DC Over	Supratensiune cale CC	Luati legatura cu unitatea de unde ati cumparat echipamentul.
03	DC Under	Bus Under Voltage	
04	DC Unbalance	Bus Unbalance	Luati legatura cu unitatea de unde ati cumparat echipamentul.
01	DC soft fail	Bus Soft start fail	
06	Output soft fail	Output Soft start fail	Luati legatura cu unitatea de unde ati cumparat echipamentul.
08	Output Volt low	Output Volt low	Luati legatura cu unitatea de unde ati cumparat echipamentul.
07	Output Volt high	Output Volt high	

8.3. Depanare alte erori

Eroare	Cauze posibile	Actiune
Nici o avertizare acustica chiar daca unitatea este conectata la retea	Nu exista voltaj la intrare	Verificati reteaua cladirii si cablajul la intrarea UPS-ului. Verificati daca intrerupatorul de intrare este inchis
Icoana de Bypass lumineaza intermitent chiar daca totul functioneaza	Invertor oprit	Apasati ON sa porniti UPS-ul
Icoana Bateriei lumineaza intermitent si alarma suna la fiecare 4 secunde	Voltajul sau frecventa la intrare sunt in afara limitei de toleranta	Verificati sursa de intrare. Verificati reteaua electrica a cladirii si cablajul la intrarea UPS-ului. Verificati daca intrerupatorul de intrare este inchis.
Perioada de alimentare de urgenta este mai mica decat valoarea nominala specificata	Baterii incarcate partial sau baterii defecte.	Incarcati bateriile cel putin 12 ore si apoi verificati capacitatea lor.



Dezafectarea echipamentelor electrice si electronice vechi

(Se aplica pentru ţarile membre ale Uniunii Europene si pentru alte tari europene cu sisteme de colectare separata)

Acest simbol aplicat pe produs sau pe ambalajul acestuia indica faptul ca acest produs nu trebuie tratat ca pe un deseu menajer.

El trebuie predat punctelor de reciclare a echipamentelor electrice si electronice.

Asigurandu-va ca acest produs este dezafectat in mod corect, veţi ajuta la prevenirea posibilelor consecinte negative asupra mediului si a sanatatii umane, care ar fi putut surveni daca produsul ar fi fost dezafectat in mod necorespunzator.

Reciclarea materialelor va ajuta la conservarea resurselor naturale.

EU Declaration of Conformity

We, manufacturer / importer

DAI-TECH SA
6 Berlin street, 307160
Dumbravita, Romania

declare that the products

Model name: Aster 6KT
Aster 10KT

Part Number: UPCMTOP960HASCG01B
UPCMTOP910KASCG01B

are in conformity with

CE (EC conformity marking)

Tested with the listed standards, the above mentioned product was found in compliance with **2014/30/EU EMC Directive** and with **2014/35/EU LVD Directive.**

EN IEC 62040-2: 2018
EN6100-3-12: 2011
EN IEC 62040-1: 2019

and in conformity with

RoHS (RoHS conformity marking) in accordance with European Directive 2011/65/EU & (EU) 2015/863

TIMIȘOARA SC DAI-TECH SA ROMANIA

Stamp

Nov. 15, 2019
Timișoara

Date and location

Tommy Lee

Signature and name

Declaratie UE de conformitate

Noi, In calitate de producator / importator

DAI-TECH SA
Str. Berlin 6, 307160
Dumbravita, Romania

declaram ca urmatoarele produse

Model name: Aster 6KT
Aster 10KT

Part Number: UPCMTOP960HASCG01B
UPCMTOP910KASCG01B

sunt conforme cu

CE (simbolul de conformitate europeana)

Testate in standardele acceptate, produsele mentionate sunt conforme cu directiva **2014/30/EU EMC** *si cu directiva* **2014/35/EC LVD**.

EN IEC 62040-2: 2018
EN6100-3-12: 2011
EN IEC 62040-1: 2019

si in conformitate cu

RoHS (simbolul de conformitate RoHS) in acord cu directiva europeana 2011/65/EU.

TIMIȘCARA SC DAI-TECH SA ROMANIA

Stampila

Nov. 15, 2019
Timișoara

Data si locatia

Tommy Lee

Semnatura si nume

