Sensor Box (Temperature & Humidity)

UPAC-TEMPHUM-CG01B

User manual



Before using this product, carefully read all product documentation and retain it for future reference.

Table of contents

EN

1. Package contents **3**

2. Product overview **4**

2.1 Product Features 4

3. Technical Specifications **5**

4. Installation Guide **6**

4.1 Method 1: Hook and Loop Tape Mounting 6

4.2 Method 2: Fixed Mounting 7

5. Conformance Approvals **8**

5.1 FCC Warning 8

6. Troubleshooting **9**

7. Appendix **10**

7.1 Input Dry Contact Application 10

Thank you for purchasing our products!

Please read this manual before using the product.



*Focusing on quality at competitive prices, **nJoy** designs consumer products for a better and enjoyable way into the digital world.*

This UPS will protect your electronic equipment from physical damage and will provide emergency battery backup power to prevent data loss in the event of power problems.

nJoy UPS models that are compatible with this product:

Echo Pro Series	**1K / 2K / 3K**
Aster Series	**1K / 2K / 3K**
Argus Series	**1.2K / 2.2K / 3K**

1 Package contents

- ✓ EMS-U01
- ✓ Hook and Loop Tape
- ✓ User's Manual x 1
- ✓ Flat Head Screw (M3x20) with Plastic Nylon Anchor
- ✓ Technical Specifications
- ✓ CAT5 RJ45 Ethernet Cable (10 feet/3.05 m)

NOTE!

If any of the above package content is missing or is damaged please contact the shop where you have bought the product from.

2 Product overview

The environmental monitoring sensor (EMS-U01) along with selected Power Management Cards (PMCARD) enables users to monitor the temperature and humidity of a server closet and/or data center remotely. Additionally, the EMS-U01 provides 4 input dry contacts that enable users to monitor the status of connected devices, such as door switch sensors.

Features include:

- Real time environment monitoring
- Remote management and configuration of the sensor via Web Browsers or NMS
- Automatic events notification via email, SMS and SNMP traps
- 4 input dry contacts application interface provided
- Displays the name and location of the sensor and connected devices

2.1. Product Features

A. LED
B. Input Dry Contact 1-4
C. Common Connection
D. RJ45 Port (connect to PMCARD)

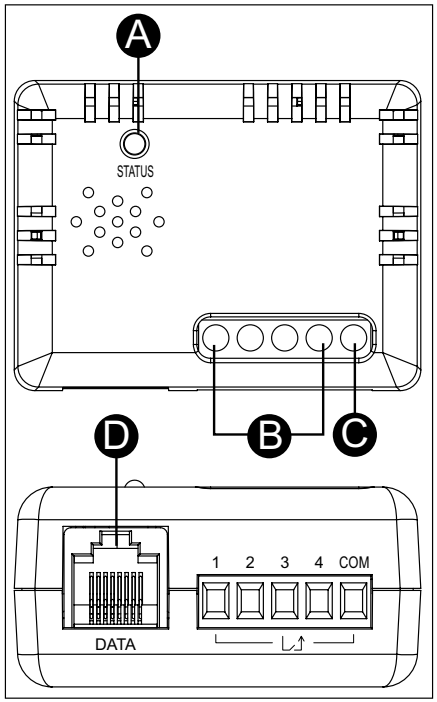

NOTE!
Please refer to Appendix for Input Dry Contact Application.

3 Technical Specifications

EMS-U01	
Input Voltage	7V - 28V
Power Dissipation	Halt mode 72 mW/ Normal mode 110 mW (Default 12V input)
Measurement Range and Accuracy	
Temperature	32-158°F with accuracy ± 1.8°F/ 0-70°C with accuracy ± 1°C
Humidity	10-90 RH with accuracy ± 2%
Communication	
Connection Port	RJ45 Port
Input Dry Contact	4
Physical	
Dimensions (L x W x H)	2.32 x 1.77 x 1.14 inches/ 59 x 45 x 29 mm
Weight	1.46 oz /41.5 g
Safety Approvals	FCC Class B, CE

4 Installation Guide

4.1. Method 1: Hook and Loop Tape Mounting

Step 1. Clean the surface of the area where the sensor will be installed. Apply one side of the hook and loop tape to the bottom of the sensor and the other side to the sensor location.

Step 2. Attach the sensor on the surface and hold for about 5 seconds to ensure cohesion.

NOTE!

Once the sensor is installed, you will want to leave it in place to ensure the hook and loop tape.

Step 3. To connect the sensor with PM-CARD, use the attached RJ45 Ethernet Cable. Plug one end into the RJ45 Port and the other end into the PMCARD.

NOTE!

If the distance of PMCARD and the sensor is longer than 10 feet/3.05 m, use a standard RJ45 Ethernet Cable as needed (max 50 feet/15 m).

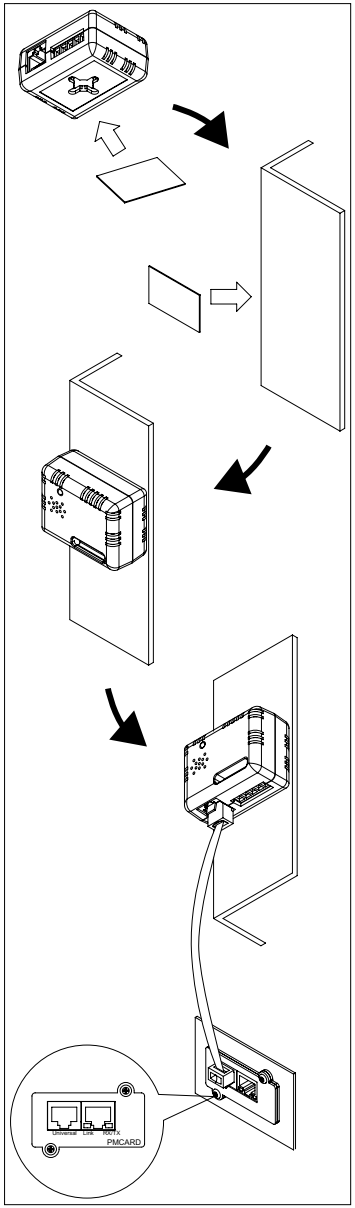

4.2. Method 2: Fixed Mounting

Step 1. Drill a hole that is compatible with the anchor and insert the included anchor.

Step 2. Insert and tighten the screw into the anchor. Leave enough of the screw exposed for the sensor to be mounted to.

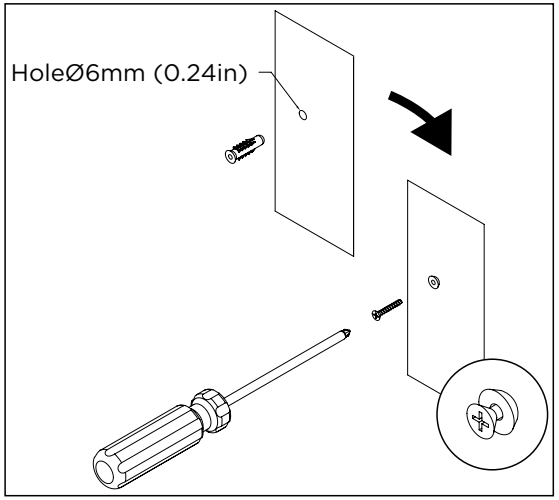

Step 3. Hang the sensor horizontally or vertically.

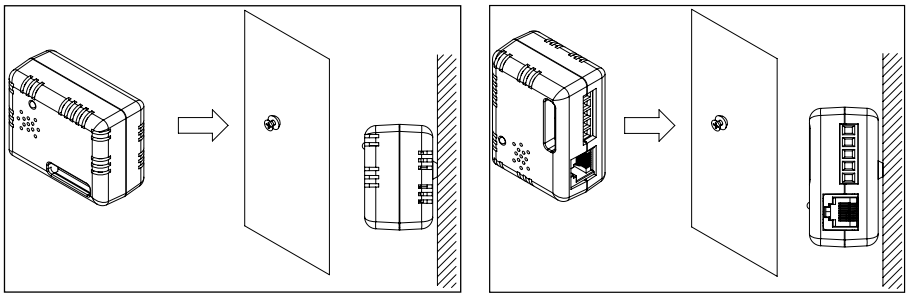

Step 4. To connect the sensor with PMCARD, use the attached RJ45 Ethernet Cable. Plug one end into the RJ45 Port and the other end into the PMCARD.

For further configuration information, please refer to the PMCARD user's manual.

5 Conformance Approvals

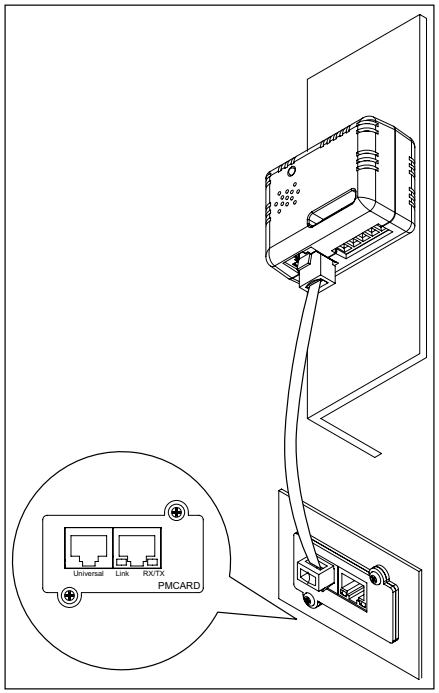

5.1. FCC Warning

This equipment has been tested and found to comply with the limits for a Class B digital device, pursuant to part 15 of the FCC Rules. These limits are designed to provide reasonable protection against harmful interference in a residential installation. This equipment generates, uses and can radiate radio frequency energy and, if not installed and used in accordance with the instructions, may cause harmful interference to radio communications. However, there is no guarantee that interference will not occur in a particular installation. If this equipment does not cause harmful interference to radio or television reception, which can be determined by turning the equipment off and on, the user is encouraged to try to correct the interference by one or more of the following measures:

- Reorient or relocate the receiving antenna.
- Increase the separation between the equipment and receiver.
- Connect the equipment into an outlet on a circuit different from that to which the receiver is connected.
- Consult the dealer or an experienced radio/TV technician for help.

This device compiles with Part 15 of the FCC Rules. Operation is subject to the following two conditions: (1) this device may not cause harmful interference, and (2) this device must accept any interference received, including interference that may cause undesired operation.

NOTE!

The manufacturer is not responsible for any radio or tv interference caused by unauthorized to this equipment. Such modifications could void the user's authority to operate the equipment.

6 Troubleshooting

Problem	Solution
The PMCARD is not able to acquire environment sensor's information.	Check the LED. When the connection is ok, the LED should always be on; otherwise, ensure the RJ45 Ethernet cable is correctly connected to the PMCARD and sensor. **NOTE!** *Do not use a crossover cable which is for Tx/Rx.*
The Input Dry Contact does not function correctly.	Ensure the Input Dry Contact wires are correctly connected and make sure the open/short circuit setting of the connected devices is the same as the setting on the Web Interface.

7 Appendix

7.1. Input Dry Contact Application

Do not input signals that carry voltage into the input dry contacts. The input dry contacts only allow for open/short circuit.

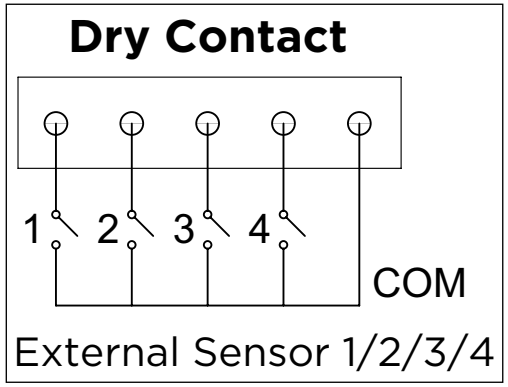

WARNINGS

- This product can expose you to chemicals including Styrene, which is known to the State of California to cause cancer, and Bisphenol-A, which is known to the State of California to cause birth defects or other reproductive harm.
  For more information go to www.P65Warnings.ca.gov.

Disposal of Old Electrical & Electronic Equipment

(Applicable in the European Union and other European countries with separate collection systems)

This symbol on the product or on its packaging indicates that this product shall not be treated as household waste.

Instead it shall be handed over to the applicable collection point for the recycling of electrical and electronic equipment.

By ensuring this product is disposed of correctly, you will help prevent potential negative consequences for the environment and human health, which could otherwise be caused by inappropriate waste handling of this product.

The recycling of materials will help to conserve natural resources.

