Modbus card

UPAC-MBUSCRD-AZ01B

User manual

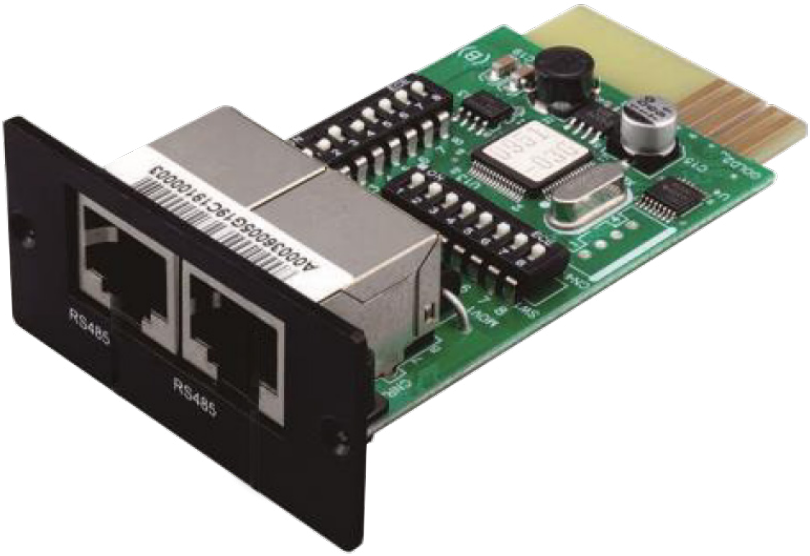

388.44.23.0

Before using this product, carefully read all product documentation and retain it for future reference.

📖 Table of contents

EN

1. Package contents 3
2. Product overview 4
3. Product Introduction 4
4. Installation and Operation 5
5. Configuration 5
5.1 Machine ID Configuration 5
5.2 Communication Format Configuration 5
5.3 RS-485 Resistance Configuration 6
5.4 Interface Configuration 6
5.5 Connection 6
6. Multiple Monitoring 7

RO

1. Continut pachet 15
2. Prezentare produs 16
3. Introducere produs 16
4. Instalarea si operarea 17
5. Configurarea 17
5.1 Configurare ID mașină 17
5.2 Configurare format de comunicare 17
5.3 Configurare rezistenta RS-485 18
5.4 Configurare interfata 18
5.5 Conexiunea 18
6. Monitorizare multipla 19

Thank you for purchasing our products!

Please read this manual before using the product.

nJoy is a brand of power and backup protection products that create solutions for multiple levels of environment complexity, residential to industrial.

A Modbus card is a hardware component that allows electronic devices or systems to communicate using the Modbus protocol. Modbus is a widely used communication protocol for remote monitoring and controlling of UPSes.

⚠ **NOTE!**

Please consult both protocol manuals to check compatibility with your UPS.

1 Package contents

- ✓ Modbus card
- ✓ Spare jumper
- ✓ User Manual

NOTE!

If any of the above package content is missing or is damaged please contact the shop where you have bought the product from.

- *If the card must be stored prior to installation; storage must be in a dry place.*
- *The admissible storage temperature range is from -10°C to +70°C.*

2 Product overview

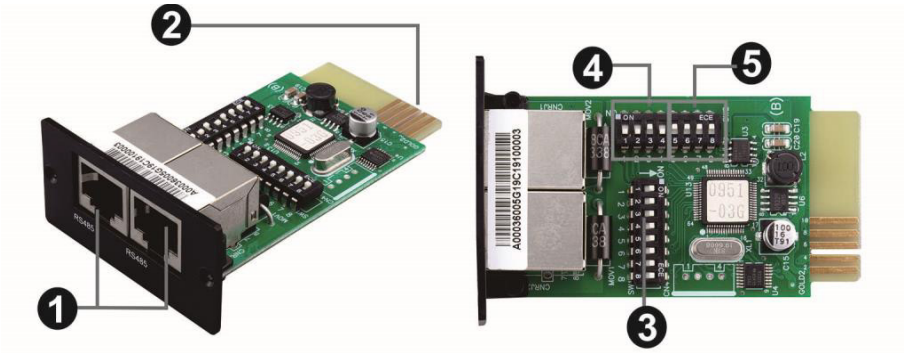

❶ RS-485 port
❷ Golden finger
❸ Address switch
❹ Communication setting
❺ Resistance switch

3 Product Introduction

The Modbus card provides UPS and PV inverter systems with the functionality of communication with PCs through MODBUS protocol:

- Implements MODBUS RTU protocol
- Provides MODBUS functions including read Holding Registers and write Registers.
- Provides RS485 interface
- Provides surge protection

4 Installation and Operation

Follow below steps to install and use this modbus card:
1. Configure Modbus ID (Refer to section 5.1 for the details)
2. Configure communication format (Refer to section 5.2 for the details)
3. Insert this modbus card into intelligent slot
4. Connect modbus card to computer with RJ45 cable, and it is not necessary to turn the UPS or PV inverter off. (Refer to section 5.5 for the details)

5 Configuration

5.1 Machine ID Configuration

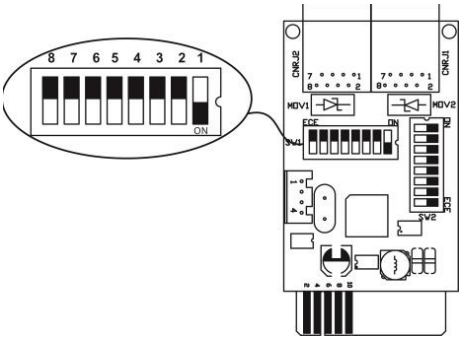

There are eight bits to present ID of each card.

Use SW1 to set machine ID. From left to right, it's 8 to 1. As shown, when the switch is pushed down, the bit is set to "one". Otherwise, the bit is set as zero. The ID of modbus card is set to 0x01 as chart. Please check appendix for detailed ID no. and SW1 setting.

5.2 Communication Format Configuration

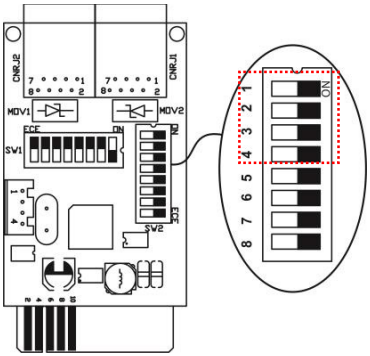

Function	Bit Setting		Meaning
Baud rate	# 2	# 1	
	OFF	OFF	2400bps
	OFF	ON	4800bps
	ON	OFF	9600bps
	ON	ON	19200bps(default)
Parity check	# 4	# 3	
	OFF	OFF	Even parity
	ON	OFF	Odd parity
	OFF	ON	No parity check 1 stop bits (Default)
	ON	ON	No parity check 2 stop bits

English
Română

5.3 RS-485 Resistance Configuration

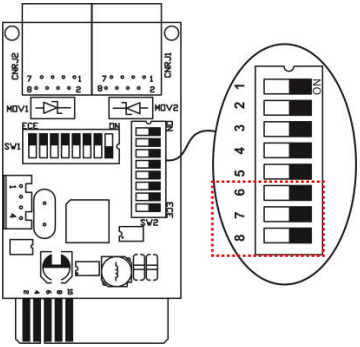

Function	Bit	Setting	Meaning
Push up resistance	#6	ON	Enable (Default)
		OFF	Disable
Pushdown resistance	#7	ON	Enable (Default)
		OFF	Disable
Terminate resistance	#8	ON	Enable (Default)
		OFF	Disable

5.4 Interface Configuration

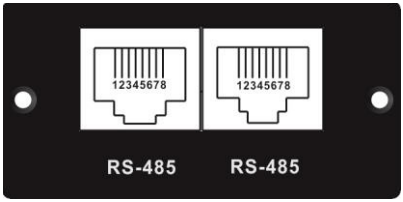

RS-485 Pin Configuration

Pin	Function
4	RS-485 - B
5	RS-485 - A
8	GND

5.5 Connection

First, please use one RS485 to RS232 converter or RS-485 to Modbus/TCP converter as media converter between Modbus card and computer. You also can use a PMU as media converter between Modbus card and PLC (Power Line Carrier) to transfer data through the grid. Please follow below chart for wiring connection between RJ45 and media converter:

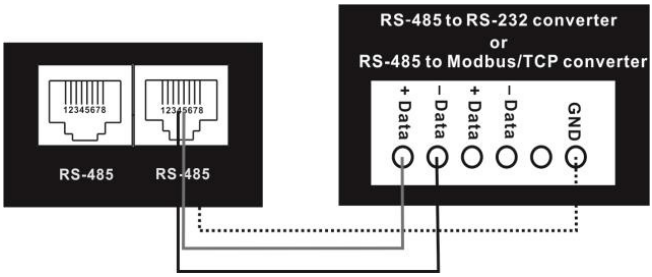

Wiring connection between RJ45 and media converter

Then, follow below diagram to connect personal computer:

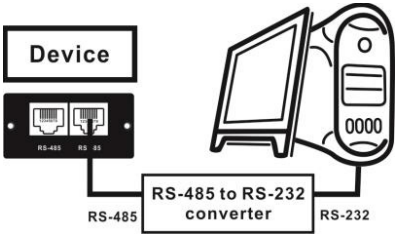

Using RS-485 to RS-232 converter

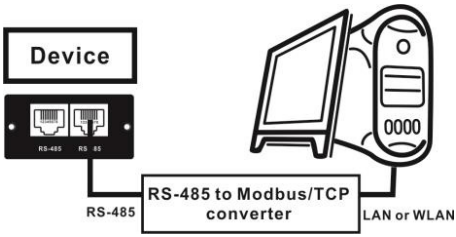

Use RS-485 to Modbus/TCP converter

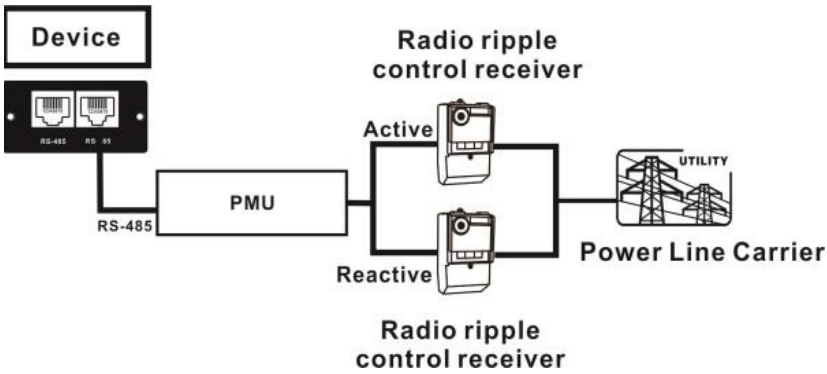

Using RS-485 to PLC converter

6 Multiple Monitoring

One modbus card only can be used in one UPS at the same time. When each UPS installed with one modbus card, up to 31 UPSs can be monitored from one computer.

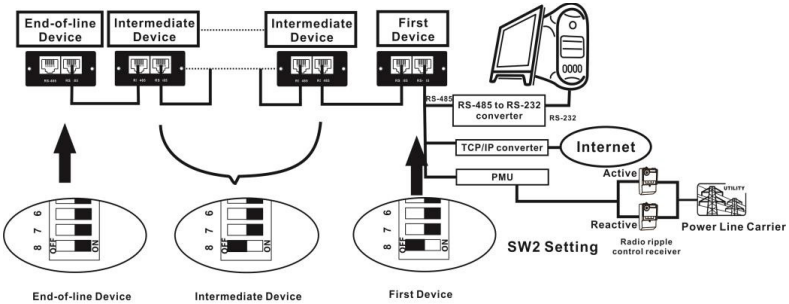

End-of-line Device

Bit #	Setting	Meaning
# 6	ON	Enable
# 7	ON	Enable
# 8	ON	Enable

Intermediate Device

Bit #	Setting	Meaning
# 6	ON	Enable
# 7	ON	Enable
# 8	OFF	Disable

First Device

Bit #	Setting	Meaning
# 6	ON	Enable
# 7	ON	Enable
# 8	OFF	Disable

English

Română

APPENDIX: Machine ID Configuration Table (SW1) √=ON ×=OFF

SW1 / ID	Bit 1	Bit 2	Bit 3	Bit 4	Bit 5	Bit 6	Bit 7	Bit 8
1	√	×	×	×	×	×	×	×
2	×	√	×	×	×	×	×	×
3	√	√	×	×	×	×	×	×
4	×	×	√	×	×	×	×	×
5	√	×	√	×	×	×	×	×
6	×	√	√	×	×	×	×	×
7	√	√	√	×	×	×	×	×
8	×	×	×	√	×	×	×	×
9	√	×	×	√	×	×	×	×
10	×	√	×	√	×	×	×	×
11	√	√	×	√	×	×	×	×
12	×	×	√	√	×	×	×	×
13	√	×	√	√	×	×	×	×
14	×	√	√	√	×	×	×	×
15	√	√	√	√	×	×	×	×
16	×	×	×	×	√	×	×	×
17	√	×	×	×	√	×	×	×
18	×	√	×	×	√	×	×	×
19	√	√	×	×	√	×	×	×
20	×	×	√	×	√	×	×	×
21	√	×	√	×	√	×	×	×
22	×	√	√	×	√	×	×	×
23	√	√	√	×	√	×	×	×
24	×	×	×	√	√	×	×	×
25	√	×	×	√	√	×	×	×
26	×	√	×	√	√	×	×	×
27	√	√	×	√	√	×	×	×
28	×	×	√	√	√	×	×	×
29	√	×	√	√	√	×	×	×
30	×	√	√	√	√	×	×	×
31	√	√	√	√	√	×	×	×
32	×	×	×	×	×	√	×	×
33	√	×	×	×	×	√	×	×
34	×	√	×	×	×	√	×	×
35	√	√	×	×	×	√	×	×
36	×	×	√	×	×	√	×	×
37	√	×	√	×	×	√	×	×
38	×	√	√	×	×	√	×	×
39	√	√	√	×	×	√	×	×

40	×	×	×	√	×	√	×	×
41	√	×	×	√	×	√	×	×
42	×	√	×	√	×	√	×	×
43	√	√	×	√	×	√	×	×
44	×	×	√	√	×	√	×	×
45	√	×	√	√	×	√	×	×
46	×	√	√	√	×	√	×	×
47	√	√	√	√	×	√	×	×
48	×	×	×	×	√	√	×	×
49	√	×	×	×	√	√	×	×
50	×	√	×	×	√	√	×	×
51	√	√	×	×	√	√	×	×
52	×	×	√	×	√	√	×	×
53	√	×	√	×	√	√	×	×
54	×	√	√	×	√	√	×	×
55	√	√	√	×	√	√	×	×
56	×	×	×	√	√	√	×	×
57	√	×	×	√	√	√	×	×
58	×	√	×	√	√	√	×	×
59	√	√	×	√	√	√	×	×
60	×	×	√	√	√	√	×	×
61	√	×	√	√	√	√	×	×
62	×	√	√	√	√	√	×	×
63	√	√	√	√	√	√	×	×
64	×	×	×	×	×	×	√	×
65	√	×	×	×	×	×	√	×
66	×	√	×	×	×	×	√	×
67	√	√	×	×	×	×	√	×
68	×	×	√	×	×	×	√	×
69	√	×	√	×	×	×	√	×
70	×	√	√	×	×	×	√	×
71	√	√	√	×	×	×	√	×
72	×	×	×	√	×	×	√	×
73	√	×	×	√	×	×	√	×
74	×	√	×	√	×	×	√	×
75	√	√	×	√	×	×	√	×
76	×	×	√	√	×	×	√	×
77	√	×	√	√	×	×	√	×
78	×	√	√	√	×	×	√	×
79	√	√	√	√	×	×	√	×
80	×	×	×	×	√	×	√	×
81	√	×	×	×	√	×	√	×

82	×	√	×	×	√	×	√	×
83	√	√	×	×	√	×	√	×
84	×	×	√	×	√	×	√	×
85	√	×	√	×	√	×	√	×
86	×	√	√	×	√	×	√	×
87	√	√	√	×	√	×	√	×
88	×	×	×	√	√	×	√	×
89	√	×	×	√	√	×	√	×
90	×	√	×	√	√	×	√	×
91	√	√	×	√	√	×	√	×
92	×	×	√	√	√	×	√	×
93	√	×	√	√	√	×	√	×
94	×	√	√	√	√	×	√	×
95	√	√	√	√	√	×	√	×
96	×	×	×	×	×	√	√	×
97	√	×	×	×	×	√	√	×
98	×	√	×	×	×	√	√	×
99	√	√	×	×	×	√	√	×
100	×	×	√	×	×	√	√	×
101	√	×	√	×	×	√	√	×
102	×	√	√	×	×	√	√	×
103	√	√	√	×	×	√	√	×
104	×	×	×	√	×	√	√	×
105	√	×	×	√	×	√	√	×
106	×	√	×	√	×	√	√	×
107	√	√	×	√	×	√	√	×
108	×	×	√	√	×	√	√	×
109	√	×	√	√	×	√	√	×
110	×	√	√	√	×	√	√	×
111	√	√	√	√	×	√	√	×
112	×	×	×	×	√	√	√	×
113	√	×	×	×	√	√	√	×
114	×	√	×	×	√	√	√	×
115	√	√	×	×	√	√	√	×
116	×	×	√	×	√	√	√	×
117	√	×	√	×	√	√	√	×
118	×	√	√	×	√	√	√	×
119	√	√	√	×	√	√	√	×
120	×	×	×	√	√	√	√	×
121	√	×	×	√	√	√	√	×
122	×	√	×	√	√	√	√	×
123	√	√	×	√	√	√	√	×

124	×	×	√	√	√	√	√	×
125	√	×	√	√	√	√	√	×
126	×	√	√	√	√	√	√	×
127	√	√	√	√	√	√	√	×
128	×	×	×	×	×	×	×	√
129	√	×	×	×	×	×	×	√
130	×	√	×	×	×	×	×	√
131	√	√	×	×	×	×	×	√
132	×	×	√	×	×	×	×	√
133	√	×	√	×	×	×	×	√
134	×	√	√	×	×	×	×	√
135	√	√	√	×	×	×	×	√
136	×	×	×	√	×	×	×	√
137	√	×	×	√	×	×	×	√
138	×	√	×	√	×	×	×	√
139	√	√	×	√	×	×	×	√
140	×	×	√	√	×	×	×	√
141	√	×	√	√	×	×	×	√
142	×	√	√	√	×	×	×	√
143	√	√	√	√	×	×	×	√
144	×	×	×	×	√	×	×	√
145	√	×	×	×	√	×	×	√
146	×	√	×	×	√	×	×	√
147	√	√	×	×	√	×	×	√
148	×	×	√	×	√	×	×	√
149	√	×	√	×	√	×	×	√
150	×	√	√	×	√	×	×	√
151	√	√	√	×	√	×	×	√
152	×	×	×	√	√	×	×	√
153	√	×	×	√	√	×	×	√
154	×	√	×	√	√	×	×	√
155	√	√	×	√	√	×	×	√
156	×	×	√	√	√	×	×	√
157	√	×	√	√	√	×	×	√
158	×	√	√	√	√	×	×	√
159	√	√	√	√	√	×	×	√
160	×	×	×	×	×	√	×	√
161	√	×	×	×	×	√	×	√
162	×	√	×	×	×	√	×	√
163	√	√	×	×	×	√	×	√
164	×	×	√	×	×	√	×	√
165	√	×	√	×	×	√	×	√

166	×	√	√	×	×	√	×	√
167	√	√	√	×	×	√	×	√
168	×	×	×	√	×	√	×	√
169	√	×	×	√	×	√	×	√
170	×	√	×	√	×	√	×	√
171	√	√	×	√	×	√	×	√
172	×	×	√	√	×	√	×	√
173	√	×	√	√	×	√	×	√
174	×	√	√	√	×	√	×	√
175	√	√	√	√	×	√	×	√
176	×	×	×	×	√	√	×	√
177	√	×	×	×	√	√	×	√
178	×	√	×	×	√	√	×	√
179	√	√	×	×	√	√	×	√
180	×	×	√	×	√	√	×	√
181	√	×	√	×	√	√	×	√
182	×	√	√	×	√	√	×	√
183	√	√	√	×	√	√	×	√
184	×	×	×	√	√	√	×	√
185	√	×	×	√	√	√	×	√
186	×	√	×	√	√	√	×	√
187	√	√	×	√	√	√	×	√
188	×	×	√	√	√	√	×	√
189	√	×	√	√	√	√	×	√
190	×	√	√	√	√	√	×	√
191	√	√	√	√	√	√	×	√
192	×	×	×	×	×	×	√	√
193	√	×	×	×	×	×	√	√
194	×	√	×	×	×	×	√	√
195	√	√	×	×	×	×	√	√
196	×	×	√	×	×	×	√	√
197	√	×	√	×	×	×	√	√
198	×	√	√	×	×	×	√	√
199	√	√	√	×	×	×	√	√
200	×	×	×	√	×	×	√	√
201	√	×	×	√	×	×	√	√
202	×	√	×	√	×	×	√	√
203	√	√	×	√	×	×	√	√
204	×	×	√	√	×	×	√	√
205	√	×	√	√	×	×	√	√
206	×	√	√	√	×	×	√	√
207	√	√	√	√	×	×	√	√

208	×	×	×	×	√	×	√	√
209	√	×	×	×	√	×	√	√
210	×	√	×	×	√	×	√	√
211	√	√	×	×	√	×	√	√
212	×	×	√	×	√	×	√	√
213	√	×	√	×	√	×	√	√
214	×	√	√	×	√	×	√	√
215	√	√	√	×	√	×	√	√
216	×	×	×	√	√	×	√	√
217	√	×	×	√	√	×	√	√
218	×	√	×	√	√	×	√	√
219	√	√	×	√	√	×	√	√
220	×	×	√	√	√	×	√	√
221	√	×	√	√	√	×	√	√
222	×	√	√	√	√	×	√	√
223	√	√	√	√	√	×	√	√
224	×	×	×	×	×	√	√	√
225	√	×	×	×	×	√	√	√
226	×	√	×	×	×	√	√	√
227	√	√	×	×	×	√	√	√
228	×	×	√	×	×	√	√	√
229	√	×	√	×	×	√	√	√
230	×	√	√	×	×	√	√	√
231	√	√	√	×	×	√	√	√
232	×	×	×	√	×	√	√	√
233	√	×	×	√	×	√	√	√
234	×	√	×	√	×	√	√	√
235	√	√	×	√	×	√	√	√
236	×	×	√	√	×	√	√	√
237	√	×	√	√	×	√	√	√
238	×	√	√	√	×	√	√	√
239	√	√	√	√	×	√	√	√
240	×	×	×	×	√	√	√	√
241	√	×	×	×	√	√	√	√
242	×	√	×	×	√	√	√	√
243	√	√	×	×	√	√	√	√
244	×	×	√	×	√	√	√	√
245	√	×	√	×	√	√	√	√
246	×	√	√	×	√	√	√	√
247	√	√	√	×	√	√	√	√



Disposal of Old Electrical & Electronic Equipment

(Applicable in the European Union and other European countries with separate collection systems)

This symbol on the product or on its packaging indicates that this product shall not be treated as household waste.

Instead it shall be handed over to the applicable collection point for the recycling of electrical and electronic equipment.

By ensuring this product is disposed of correctly, you will help prevent potential negative consequences for the environment and human health, which could otherwise be caused by inappropriate waste handling of this product.

The recycling of materials will help to conserve natural resources.

Mulțumim pentru că ați ales produsele noastre!

Vă rugăm citiți manualul de utilizare înainte de a pune în funcțiune acest produs.

nJoy este un brand de solutii UPS dedicate protectiei si rezervei de energie din diferite medii de utilizare, de la rezidential la industrial.

Un card Modbus este o componentă hardware care permite dispozitivelor sau sistemelor electronice să comunice folosind protocolul Modbus (P38).

⚠ NOTA!

Va rugam consultati manualele pentru a verifica ca protocoalele de comunicatie sunt compatibile cu UPS dvs.

1 Continut pachet

- ✓ Cardul Modbus
- ✓ Jumper de rezerva (liber)
- ✓ Manual de utilizare

NOTA!

Dacă oricare dintre conținutul pachetului de mai sus lipsește sau este deteriorat, vă rugăm să contactați magazinul de unde ați cumpărat produsul.

- *Dacă cardul trebuie depozitat înainte de instalare pastrati-l într-un loc uscat.*
- *Intervalul de temperatură de depozitare acceptat este de la -10°C la +70°C.*

2 Prezentare produs

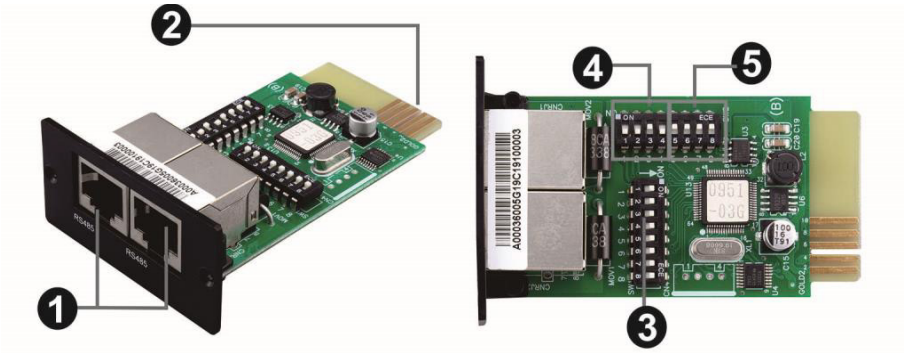

1. Port RS-485
2. Conexiune electrica (placata cu aur)
3. Comutator adresa
4. Setare comunicatie
5. Comutator de rezistență

3 Introducere produs

Cardul Modbus oferă sistemelor UPS și invertoare fotovoltaice funcționalitatea de comunicare cu computerele prin protocolul MODBUS:

- Implementează protocolul MODBUS RTU
- Oferă funcții MODBUS, inclusiv citirea registrelor de păstrare și scrierea registrelor.
- Oferă interfață RS485.
- Oferă protecție la supratensiune.

4 Instalarea si operarea

Urmați pașii de mai jos pentru a instala și utiliza cardul modbus:
1. Configurați ID Modbus (Consultați secțiunea 5.1 pentru detalii).
2. Configurați formatul de comunicare (Consultați secțiunea 5.2 pentru detalii).
3. Introduceți cardul modbus în slotul inteligent.
4. Conectați cardul modbus la computer cu cablu RJ45 fara a fi necesar.
oprirea UPS-ul sau invertorul PV. (Consultați secțiunea 5.5 pentru detalii).

5 Configurarea

5.1 Configurare ID mașină

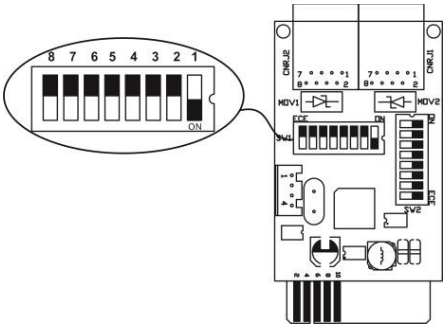

Există opt biți pentru a prezenta ID-ul fiecărui card

Utilizați SW1 pentru a seta ID-ul mașinii. De la stânga la dreapta, este 8 la 1. După cum se arată, când comutatorul este apăsat în jos, bitul este setat la „unu". În caz contrar, bitul este setat la zero. ID-ul cardului modbus este setat la 0x01 ca in diagramă. Vă rugam verificați anexele pentru detalii ID și setarea SW1.

5.2 Configurare format de comunicare

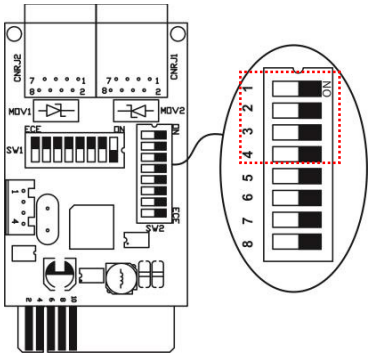

Functie	Setare bit		Semnificatie
Viteza de transmisie	# 2	# 1	
	OFF	OFF	2400bps
	OFF	ON	4800bps
	ON	OFF	9600bps
	ON	ON	19200bps(default)
Verificare paritate	# 4	# 3	
	OFF	OFF	Paritate para
	ON	OFF	Impara
	OFF	ON	Fara verificare paritate 1 bit (implicit)
	ON	ON	Fara verificare paritate 2 biti

English
Română

5.3 Configurare rezistenta RS-485

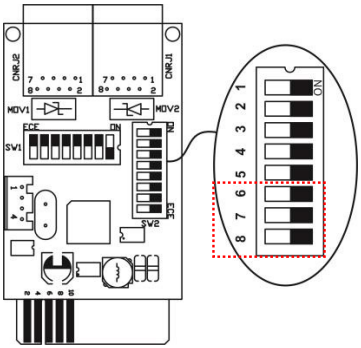

Functie	Bit	Setare	Semnificatie
Rezistenta impingere sus	#6	ON	Pornit (implicit)
		OFF	Oprit
Rezistenta impingere jos	#7	ON	Pornit (implicit)
		OFF	Oprit
Opriți rezistența	#8	ON	Pornit (implicit)
		OFF	Oprit

5.4 Configurare interfata

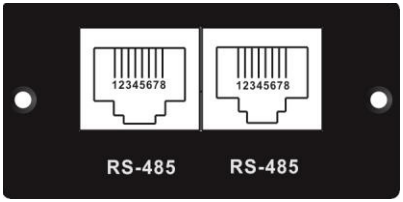

Configurare pin RS-485

Pin	Functie
4	RS-485 - B
5	RS-485 - A
8	GND

5.5 Conexiunea

În primul rând, vă rugăm să utilizați un convertor RS485 la RS232 sau un convertor RS-485 la Modbus/TCP ca un convertor media între cardul Modbus și computer. De asemenea, puteți utiliza un PMU ca un convertor media între cardul Modbus și PLC (Power Line Carrier) pentru a transfera date prin rețea. Vă rugăm să urmați tabelul de mai jos pentru conexiunea cablului dintre RJ45 și convertor media:

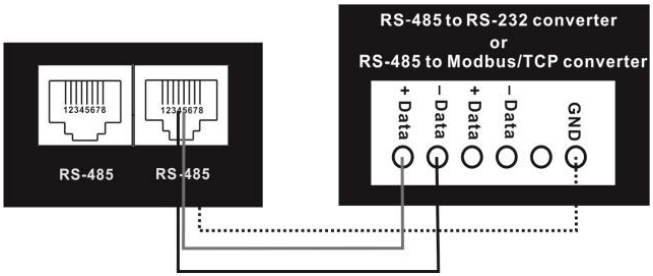

Conexiunea cablului dintre RJ45 și convertor media

Folositi diagrama de mai jos pentru conexiune ala PC:

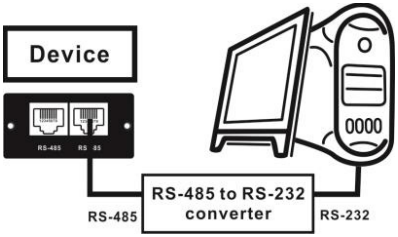

Using RS-485 to RS-232 converter

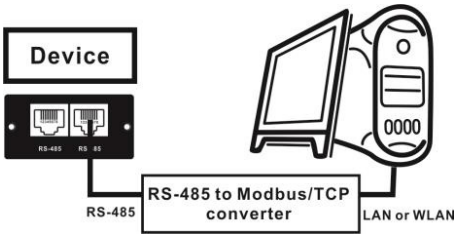

Use RS-485 to Modbus/TCP converter

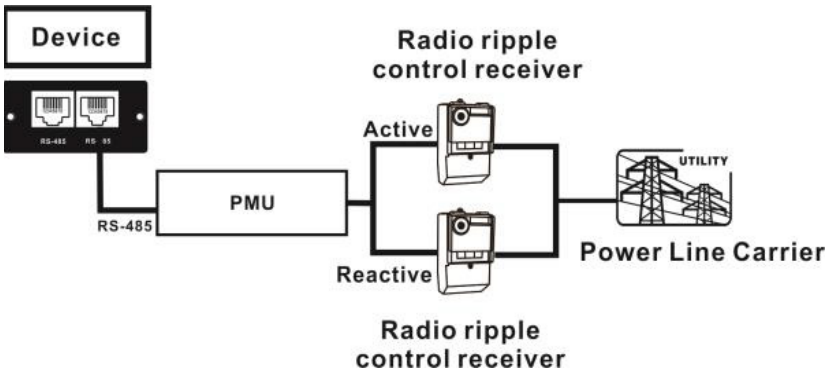

Using RS-485 to PLC converter

6 Monitorizare multipla

Un singur card Modbus se utilizează cu un singur UPS. Fiecare UPS va utiliza cardul sau propriu Modbus, se pot monitoriza 31 de UPS de la un singur PC.

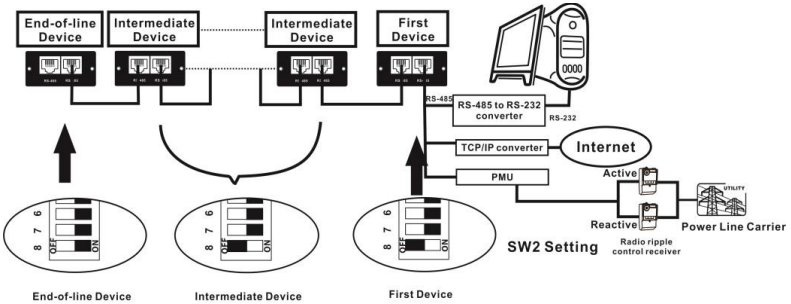

End-of-line Device

Bit #	Setting	Meaning
# 6	ON	Enable
# 7	ON	Enable
# 8	ON	Enable

Intermediate Device

Bit #	Setting	Meaning
# 6	ON	Enable
# 7	ON	Enable
# 8	OFF	Disable

First Device

Bit #	Setting	Meaning
# 6	ON	Enable
# 7	ON	Enable
# 8	OFF	Disable

English

Română

ANEXĂ: Tabelul de configurare a ID-ului

SW1 / ID	Bit 1	Bit 2	Bit 3	Bit 4	Bit 5	Bit 6	Bit 7	Bit 8
1	√	×	×	×	×	×	×	×
2	×	√	×	×	×	×	×	×
3	√	√	×	×	×	×	×	×
4	×	×	√	×	×	×	×	×
5	√	×	√	×	×	×	×	×
6	×	√	√	×	×	×	×	×
7	√	√	√	×	×	×	×	×
8	×	×	×	√	×	×	×	×
9	√	×	×	√	×	×	×	×
10	×	√	×	√	×	×	×	×
11	√	√	×	√	×	×	×	×
12	×	×	√	√	×	×	×	×
13	√	×	√	√	×	×	×	×
14	×	√	√	√	×	×	×	×
15	√	√	√	√	×	×	×	×
16	×	×	×	×	√	×	×	×
17	√	×	×	×	√	×	×	×
18	×	√	×	×	√	×	×	×
19	√	√	×	×	√	×	×	×
20	×	×	√	×	√	×	×	×
21	√	×	√	×	√	×	×	×
22	×	√	√	×	√	×	×	×
23	√	√	√	×	√	×	×	×
24	×	×	×	√	√	×	×	×
25	√	×	×	√	√	×	×	×
26	×	√	×	√	√	×	×	×
27	√	√	×	√	√	×	×	×
28	×	×	√	√	√	×	×	×
29	√	×	√	√	√	×	×	×
30	×	√	√	√	√	×	×	×
31	√	√	√	√	√	×	×	×
32	×	×	×	×	×	√	×	×
33	√	×	×	×	×	√	×	×
34	×	√	×	×	×	√	×	×
35	√	√	×	×	×	√	×	×
36	×	×	√	×	×	√	×	×
37	√	×	√	×	×	√	×	×
38	×	√	√	×	×	√	×	×
39	√	√	√	×	×	√	×	×

40	×	×	×	√	×	√	×	×
41	√	×	×	√	×	√	×	×
42	×	√	×	√	×	√	×	×
43	√	√	×	√	×	√	×	×
44	×	×	√	√	×	√	×	×
45	√	×	√	√	×	√	×	×
46	×	√	√	√	×	√	×	×
47	√	√	√	√	×	√	×	×
48	×	×	×	×	√	√	×	×
49	√	×	×	×	√	√	×	×
50	×	√	×	×	√	√	×	×
51	√	√	×	×	√	√	×	×
52	×	×	√	×	√	√	×	×
53	√	×	√	×	√	√	×	×
54	×	√	√	×	√	√	×	×
55	√	√	√	×	√	√	×	×
56	×	×	×	√	√	√	×	×
57	√	×	×	√	√	√	×	×
58	×	√	×	√	√	√	×	×
59	√	√	×	√	√	√	×	×
60	×	×	√	√	√	√	×	×
61	√	×	√	√	√	√	×	×
62	×	√	√	√	√	√	×	×
63	√	√	√	√	√	√	×	×
64	×	×	×	×	×	×	√	×
65	√	×	×	×	×	×	√	×
66	×	√	×	×	×	×	√	×
67	√	√	×	×	×	×	√	×
68	×	×	√	×	×	×	√	×
69	√	×	√	×	×	×	√	×
70	×	√	√	×	×	×	√	×
71	√	√	√	×	×	×	√	×
72	×	×	×	√	×	×	√	×
73	√	×	×	√	×	×	√	×
74	×	√	×	√	×	×	√	×
75	√	√	×	√	×	×	√	×
76	×	×	√	√	×	×	√	×
77	√	×	√	√	×	×	√	×
78	×	√	√	√	×	×	√	×
79	√	√	√	√	×	×	√	×
80	×	×	×	×	√	×	√	×
81	√	×	×	×	√	×	√	×

82	×	√	×	×	√	×	√	×
83	√	√	×	×	√	×	√	×
84	×	×	√	×	√	×	√	×
85	√	×	√	×	√	×	√	×
86	×	√	√	×	√	×	√	×
87	√	√	√	×	√	×	√	×
88	×	×	×	√	√	×	√	×
89	√	×	×	√	√	×	√	×
90	×	√	×	√	√	×	√	×
91	√	√	×	√	√	×	√	×
92	×	×	√	√	√	×	√	×
93	√	×	√	√	√	×	√	×
94	×	√	√	√	√	×	√	×
95	√	√	√	√	√	×	√	×
96	×	×	×	×	×	√	√	×
97	√	×	×	×	×	√	√	×
98	×	√	×	×	×	√	√	×
99	√	√	×	×	×	√	√	×
100	×	×	√	×	×	√	√	×
101	√	×	√	×	×	√	√	×
102	×	√	√	×	×	√	√	×
103	√	√	√	×	×	√	√	×
104	×	×	×	√	×	√	√	×
105	√	×	×	√	×	√	√	×
106	×	√	×	√	×	√	√	×
107	√	√	×	√	×	√	√	×
108	×	×	√	√	×	√	√	×
109	√	×	√	√	×	√	√	×
110	×	√	√	√	×	√	√	×
111	√	√	√	√	×	√	√	×
112	×	×	×	×	√	√	√	×
113	√	×	×	×	√	√	√	×
114	×	√	×	×	√	√	√	×
115	√	√	×	×	√	√	√	×
116	×	×	√	×	√	√	√	×
117	√	×	√	×	√	√	√	×
118	×	√	√	×	√	√	√	×
119	√	√	√	×	√	√	√	×
120	×	×	×	√	√	√	√	×
121	√	×	×	√	√	√	√	×
122	×	√	×	√	√	√	√	×
123	√	√	×	√	√	√	√	×

124	×	×	√	√	√	√	√	×
125	√	×	√	√	√	√	√	×
126	×	√	√	√	√	√	√	×
127	√	√	√	√	√	√	√	×
128	×	×	×	×	×	×	×	√
129	√	×	×	×	×	×	×	√
130	×	√	×	×	×	×	×	√
131	√	√	×	×	×	×	×	√
132	×	×	√	×	×	×	×	√
133	√	×	√	×	×	×	×	√
134	×	√	√	×	×	×	×	√
135	√	√	√	×	×	×	×	√
136	×	×	×	√	×	×	×	√
137	√	×	×	√	×	×	×	√
138	×	√	×	√	×	×	×	√
139	√	√	×	√	×	×	×	√
140	×	×	√	√	×	×	×	√
141	√	×	√	√	×	×	×	√
142	×	√	√	√	×	×	×	√
143	√	√	√	√	×	×	×	√
144	×	×	×	×	√	×	×	√
145	√	×	×	×	√	×	×	√
146	×	√	×	×	√	×	×	√
147	√	√	×	×	√	×	×	√
148	×	×	√	×	√	×	×	√
149	√	×	√	×	√	×	×	√
150	×	√	√	×	√	×	×	√
151	√	√	√	×	√	×	×	√
152	×	×	×	√	√	×	×	√
153	√	×	×	√	√	×	×	√
154	×	√	×	√	√	×	×	√
155	√	√	×	√	√	×	×	√
156	×	×	√	√	√	×	×	√
157	√	×	√	√	√	×	×	√
158	×	√	√	√	√	×	×	√
159	√	√	√	√	√	×	×	√
160	×	×	×	×	×	√	×	√
161	√	×	×	×	×	√	×	√
162	×	√	×	×	×	√	×	√
163	√	√	×	×	×	√	×	√
164	×	×	√	×	×	√	×	√
165	√	×	√	×	×	√	×	√

166	×	√	√	×	×	√	×	√
167	√	√	√	×	×	√	×	√
168	×	×	×	√	×	√	×	√
169	√	×	×	√	×	√	×	√
170	×	√	×	√	×	√	×	√
171	√	√	×	√	×	√	×	√
172	×	×	√	√	×	√	×	√
173	√	×	√	√	×	√	×	√
174	×	√	√	√	×	√	×	√
175	√	√	√	√	×	√	×	√
176	×	×	×	×	√	√	×	√
177	√	×	×	×	√	√	×	√
178	×	√	×	×	√	√	×	√
179	√	√	×	×	√	√	×	√
180	×	×	√	×	√	√	×	√
181	√	×	√	×	√	√	×	√
182	×	√	√	×	√	√	×	√
183	√	√	√	×	√	√	×	√
184	×	×	×	√	√	√	×	√
185	√	×	×	√	√	√	×	√
186	×	√	×	√	√	√	×	√
187	√	√	×	√	√	√	×	√
188	×	×	√	√	√	√	×	√
189	√	×	√	√	√	√	×	√
190	×	√	√	√	√	√	×	√
191	√	√	√	√	√	√	×	√
192	×	×	×	×	×	×	√	√
193	√	×	×	×	×	×	√	√
194	×	√	×	×	×	×	√	√
195	√	√	×	×	×	×	√	√
196	×	×	√	×	×	×	√	√
197	√	×	√	×	×	×	√	√
198	×	√	√	×	×	×	√	√
199	√	√	√	×	×	×	√	√
200	×	×	×	√	×	×	√	√
201	√	×	×	√	×	×	√	√
202	×	√	×	√	×	×	√	√
203	√	√	×	√	×	×	√	√
204	×	×	√	√	×	×	√	√
205	√	×	√	√	×	×	√	√
206	×	√	√	√	×	×	√	√
207	√	√	√	√	×	×	√	√

208	×	×	×	×	√	×	√	√
209	√	×	×	×	√	×	√	√
210	×	√	×	×	√	×	√	√
211	√	√	×	×	√	×	√	√
212	×	×	√	×	√	×	√	√
213	√	×	√	×	√	×	√	√
214	×	√	√	×	√	×	√	√
215	√	√	√	×	√	×	√	√
216	×	×	×	√	√	×	√	√
217	√	×	×	√	√	×	√	√
218	×	√	×	√	√	×	√	√
219	√	√	×	√	√	×	√	√
220	×	×	√	√	√	×	√	√
221	√	×	√	√	√	×	√	√
222	×	√	√	√	√	×	√	√
223	√	√	√	√	√	×	√	√
224	×	×	×	×	×	√	√	√
225	√	×	×	×	×	√	√	√
226	×	√	×	×	×	√	√	√
227	√	√	×	×	×	√	√	√
228	×	×	√	×	×	√	√	√
229	√	×	√	×	×	√	√	√
230	×	√	√	×	×	√	√	√
231	√	√	√	×	×	√	√	√
232	×	×	×	√	×	√	√	√
233	√	×	×	√	×	√	√	√
234	×	√	×	√	×	√	√	√
235	√	√	×	√	×	√	√	√
236	×	×	√	√	×	√	√	√
237	√	×	√	√	×	√	√	√
238	×	√	√	√	×	√	√	√
239	√	√	√	√	×	√	√	√
240	×	×	×	×	√	√	√	√
241	√	×	×	×	√	√	√	√
242	×	√	×	×	√	√	√	√
243	√	√	×	×	√	√	√	√
244	×	×	√	×	√	√	√	√
245	√	×	√	×	√	√	√	√
246	×	√	√	×	√	√	√	√
247	√	√	√	×	√	√	√	√

Memo



Dezafectarea echipamentelor electrice și electronice vechi

(Se aplică pentru țările membre ale Uniunii Europene și pentru alte țări europene cu sisteme de colectare separată).

Acest simbol aplicat pe produs sau pe ambalajul acestuia indică faptul că acest produs nu trebuie tratat ca pe un deșeu menajer.

El trebuie predat punctelor de reciclare a echipamentelor electrice și electronice.

Asigurându-vă că acest produs este dezafectat în mod corect, veți ajuta la prevenirea posibilelor consecințe negative asupra mediului și a sănătății umane, care ar fi putut surveni daca produsul ar fi fost dezafectat în mod necorespunzător.

Reciclarea materialelor vă ajută la conservarea resurselor naturale.

