Garun Series

40 pieces battery cabinet

UPBPTA1222AX-AZ01B

Installation and battery connection for 40 pieces EBM, sequence (10+10 x 2)



Before using this product, carefully read all product documentation and retain it for future reference.

Thank you for purchasing our products!

Please read this manual before using the product.

*Focusing on quality at competitive prices, **nJoy** designs consumer products for a better and enjoyable way into the digital world.*

The battery pack is a product that works only with an UPS. The battery pack will provide or extend the backup time of your UPS.

Garun Series models that are compatible with this EBM model:

10K VA	**Garun 10KL**

1 Installation and battery connection in sequence (10 + 10) x 2

Step 1

Turn the cabinet's switch to OFF. Remove the top lid by sliding itupwards.

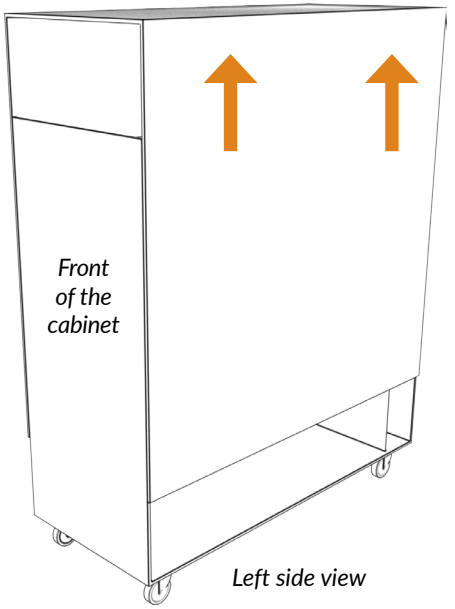

Step 2

Remove the left-side pieces that help keep the batteries in place.

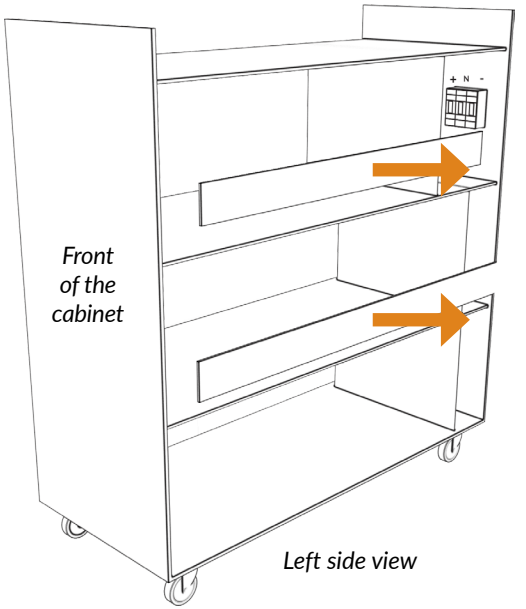

Step 3

Identify the placement of trays in the battery cabinet, existing on three levels: down, middle and top. Put the batteries on the trays, starting with the bottom tray, then the middle one and the top one at last.

The trays will contain, from bottom up: 14 batteries (down), 14 batteries (middle), 12 batteries (top), total 40 batteries.

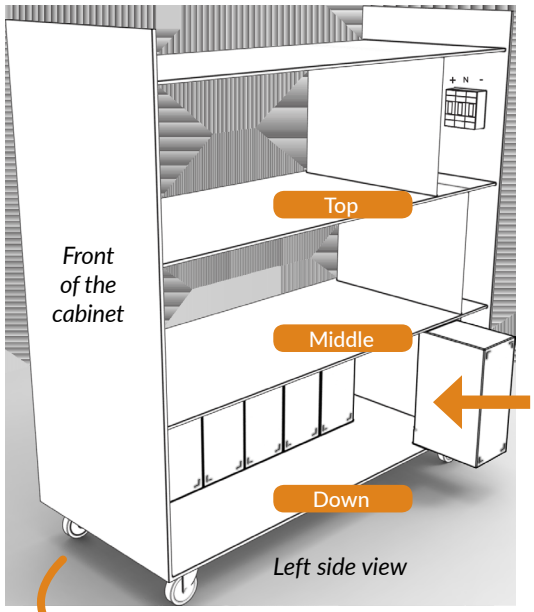

Step 4

Looking at the front of the cabinet, the batteries will be placed upwards:

4.1 First, on the lower (down) tray, through the left side, place 7 batteries through to the right side of cabinet, seated with terminals down, towards outside the cabinet.

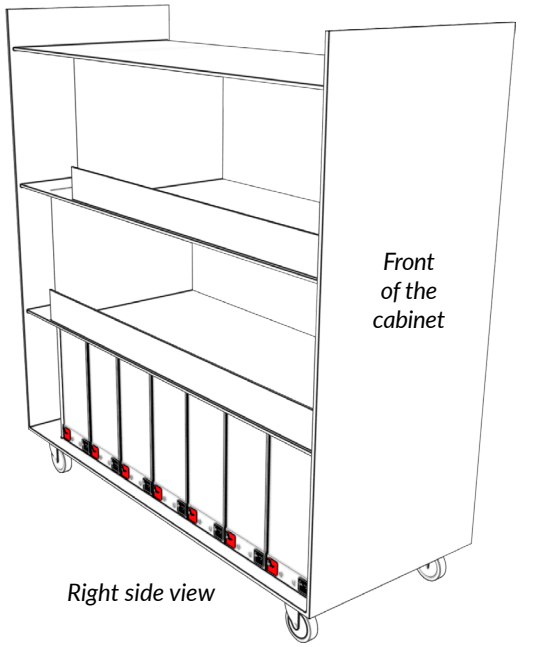

4.2 Then, on the same tray, place another 7 batteries upwards, with the terminals down, this time with the terminals towards the left of the cabinet.

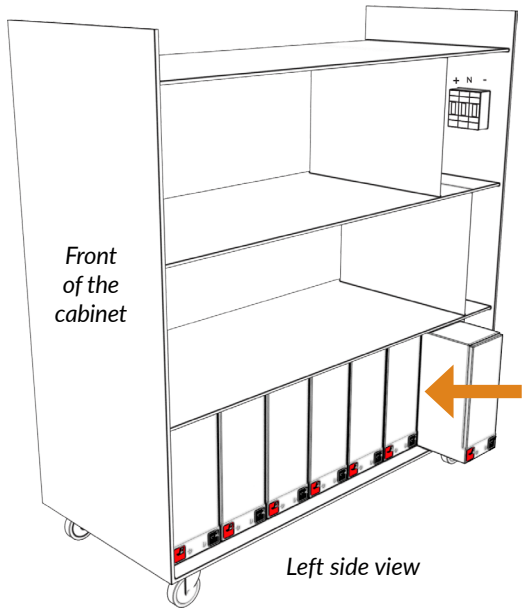

4.3 Populate middle tray with batteries, sitting upright, first row of 7 batteries with terminals towards the right of the cabinet, but this time placed with the terminals up (as opposed to the tray below).

4.4 Continue populating the middle tray with another 7 batteries, placed upwards, with terminals up and towards the left side of the cabinet.

4.5 Top tray is populated with 12 batteries placed with terminals similar with the bottom tray.

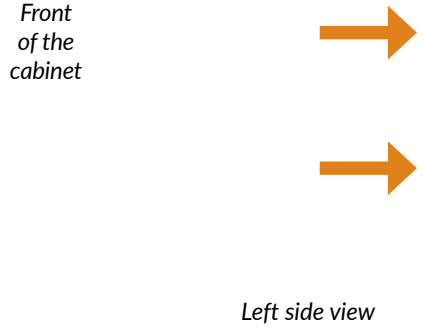

Step 5
Insert back the pieces that hold the batteries in place.

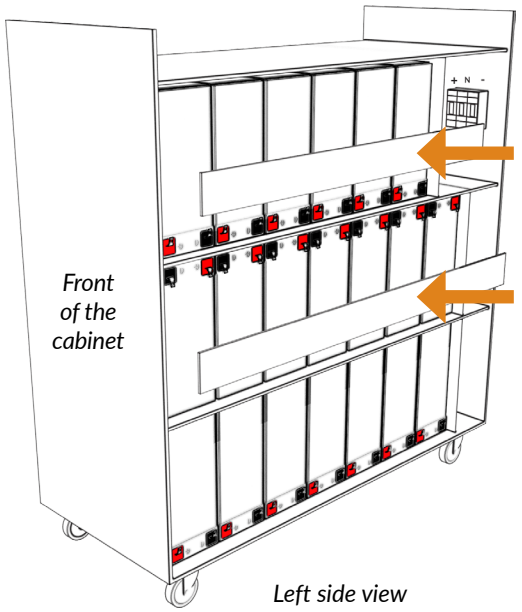

Left side view

Step 6
Find the connection cables. Each cable is numbered from 1 to 7, with the following quantities for each cable type:

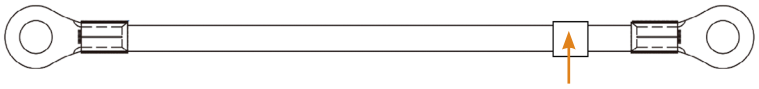
Cable numbering

Nr.	Description	Pieces	Cable numbering
1	#10 AWG cable (Black)	32	1
2	#10 AWG cable (Black)	2	2
3	#10 AWG cable (Black)	2	3
4	#10 AWG cable (Red) - bound to the cabinet	2	4 (BAT+)
5	#10 AWG cable (Black) - bound to the cabinet	2	5 (BAT-)
6	#10 AWG cable (Blue) - bound to the cabinet	2	6 (N)
7	#10 AWG cable (Blue)	2	7

Step 7
The following connections are made (according to the diagram on pages 8-9).

In the diagram each battery is coded according to tray level, side and number. For example. DR2 means battery no. two (counting from the front of the cabinet), from the Down tray, Right side of the cabinet:

7.1 Using cables no.1, connect all batteries on the 3 levels in series ((-, black) terminal of the first battery to the (+, red) terminal of the adjacent battery), except for two batteries on the middle level, namely: MR3 and MR4, respectively ML3 and ML4, which will be connected as shown in the step 7.6.

7.2 Using cables no.2 connect the free terminals of the ML7 batteries with UL6, respectively, MR7 with UR6.

7.3 Using the cables no. 3, connect the free terminals of the DL1 batteries with ML1, respectively MR1 with DR1.

7.4 Using one of the red no. 4 cables, bound to the cabinet, connect the free (+, red) terminal of the DR7 battery on the right side of the cabinet. The other red cable no. 4, bound to the cabinet, connect it to the free (+, red) terminal of UL1 battery on the left side of the cabinet.

7.5 Using one of the no. 5, black cables, bounded to the cabinet, connect the free (-, black) terminal of the UR1 battery on the right side of the cabinet. The other black no. 5 cable, bounded to the cabinet, connect it to the free (-, black) terminal of the DL7 battery on the left side of the cabinet.

7.6 Using the two blue short cables no.7, with one of the branch provided with double connector, connect the free terminals of ML3 and ML4 batteries on the left side, respectively MR3 and MR4 batteries on the right side. Then connect the free terminals to one of the blue cables no. 6, bounded to the cabinet (one on each side of the cabinet).

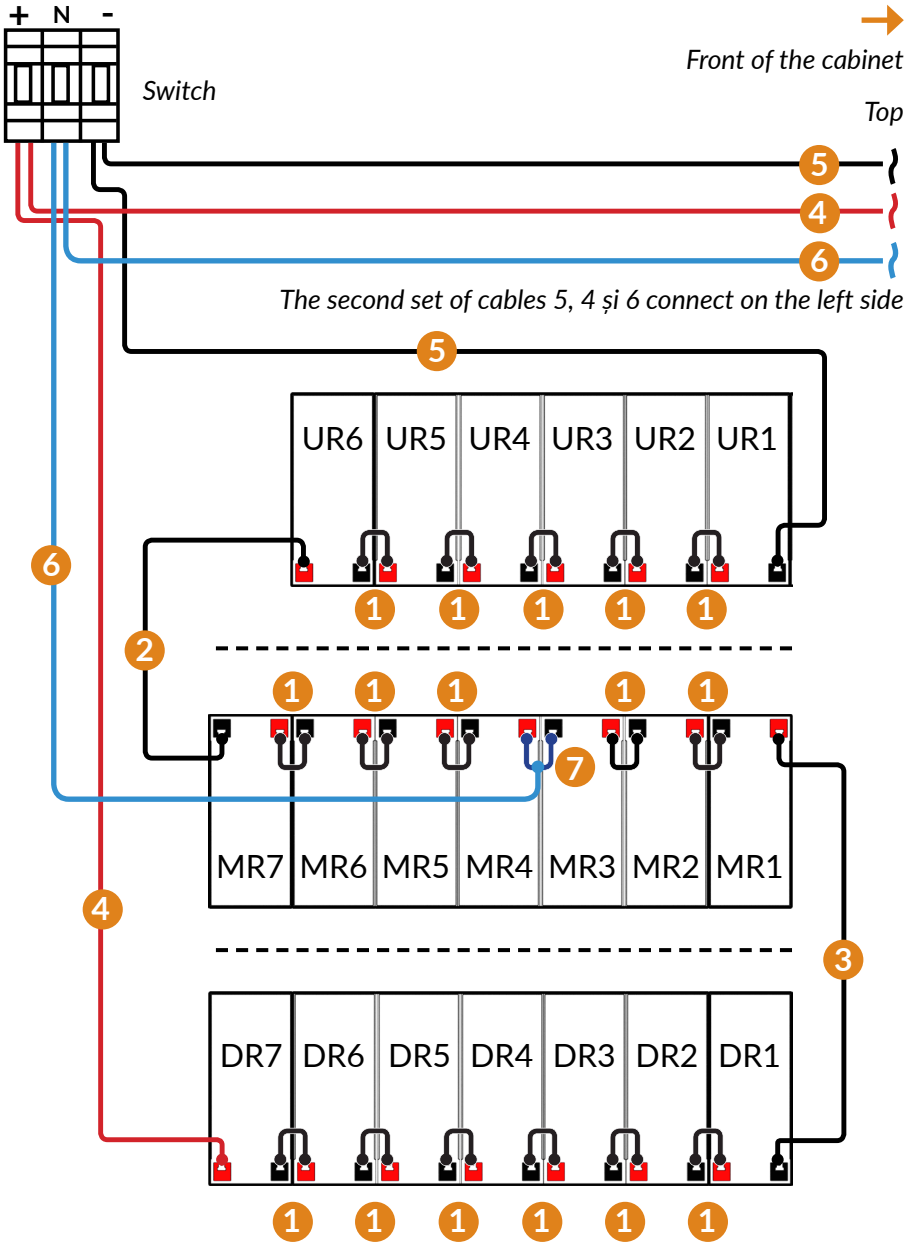
+ N -
Switch
Front of the cabinet
Top
5
4
6
The second set of cables 5, 4 și 6 connect on the left side
UR6 UR5 UR4 UR3 UR2 UR1
MR7 MR6 MR5 MR4 MR3 MR2 MR1
DR7 DR6 DR5 DR4 DR3 DR2 DR1
1
2
3
4
5
6
7
Right side view
Bottom

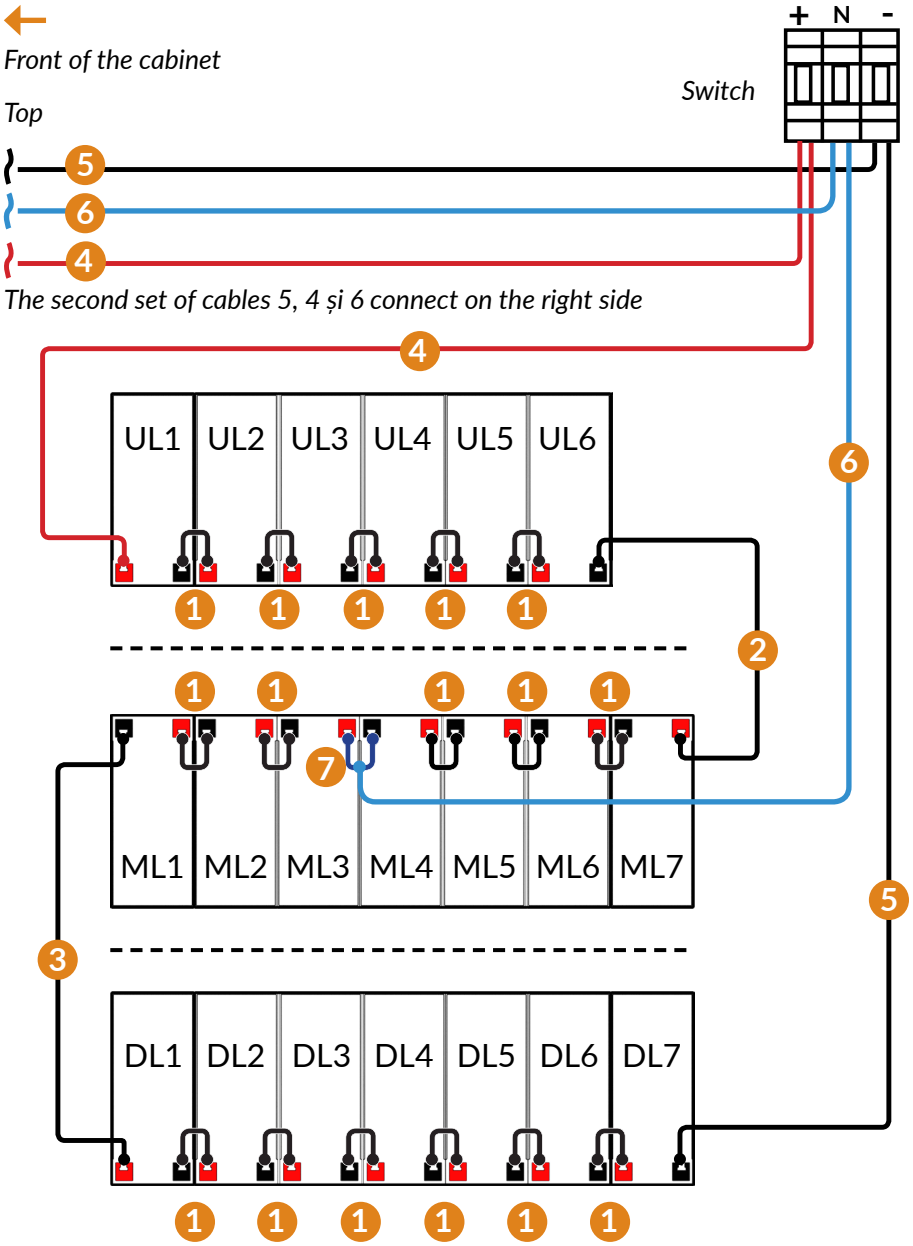
Front of the cabinet
Top
+ N -
Switch
5
6
4
The second set of cables 5, 4 și 6 connect on the right side
UL1 UL2 UL3 UL4 UL5 UL6
ML1 ML2 ML3 ML4 ML5 ML6 ML7
DL1 DL2 DL3 DL4 DL5 DL6 DL7
1
2
3
4
5
6
7
Bottom
Left side view

Step 8
Make sure the cables are correctly connected on each side.

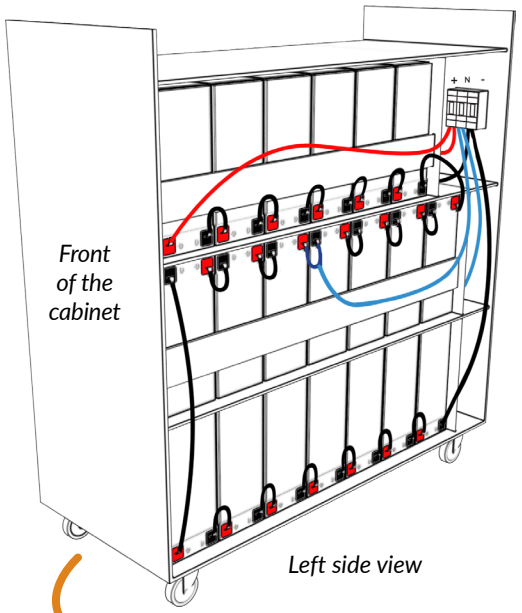

Left side view

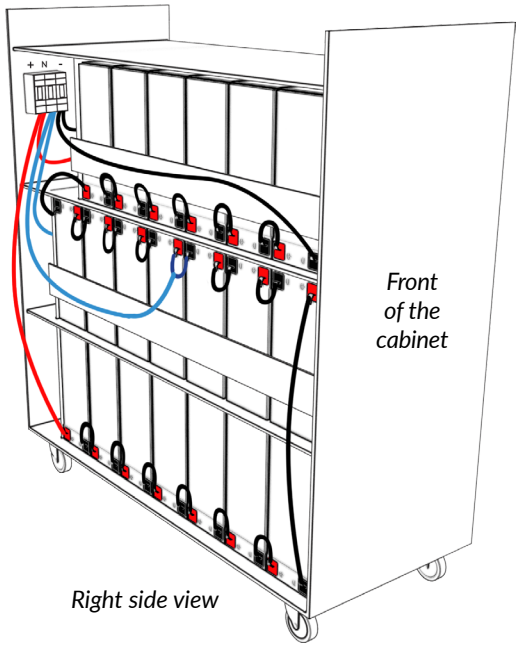

Right side view

8.1
Slide the top lid back on and secure it in place.

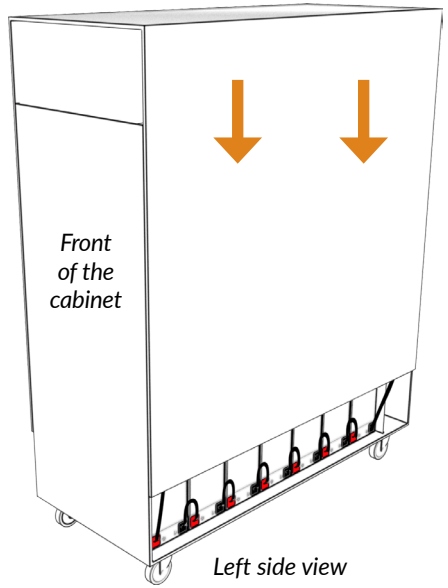

Left side view

Step 9
Switch the power to ON. The EBM is now active and functioning.

NOTE!
If you want to use only one battery string (10 + 10) x1, please populate with batteries only the bottom tray (JD1-JD7 batteries on the right side, respectively JS1-JS7 on the left side). In the middle, just put the batteries from MD1 to MD3 on the right side, respectively MS1 - MS3 on the left side.

Follow the same steps for connecting the cables. Will you use only a black cable, one red cable and the two blue cables bounded to the cabinet. Please connect the blue cables bounded to the cabinet to MR3 (-, black) battery terminal on the right side, respectively ML3 (+, red) terminal on the left side (you will no longer use the short blue cables no. 7).



Disposal of Old Electrical & Electronic Equipment

(Applicable in the European Union and other European countries with separate collection systems)

This symbol on the product or on its packaging indicates that this product shall not be treated as household waste.

Instead it shall be handed over to the applicable collection point for the recycling of electrical and electronic equipment.

By ensuring this product is disposed of correctly, you will help prevent potential negative consequences for the environment and human health, which could otherwise be caused by inappropriate waste handling of this product.

The recycling of materials will help to conserve natural resources.

Memo

