DAHAI SOLAR




# SDC10-Box5

V1.1-2025-05

DAHAI SOLAR

# **Basic-L1** Operation Manual

**This Manual introduces Basic-L1 from DAHAI.**

Basic-L1 is a Low-voltage Lithium-ion Phosphate Battery storage system. Please read this manual before you install the battery and follow the instruction carefully during the installation process.







## CONTENTS


| | | |
|---|---|---|
| **1.Technical Data** | | 1-2 |
| **2.Safety Information** | | |
| 2.1 | General Safety | 3 |
| 2.2 | Personal Safety | 3-4 |
| 2.3 | Electrical Safety | 4-6 |
| 2.4 | Transportation Safety | 6 |
| **3.Product Overview** | | |
| 3.1 | Brief Introduction | 7 |
| 3.2 | Interface Introduction | 8 |
| 3.2.1 | Switch ON/OFF | 8-9 |
| 3.2.2 | LED Indicator Definition | 9-10 |
| 3.2.3 | CAN / RS485 Port | 10 |
| 3.3.4 | RS232 Port | 10 |
| **4.Installation guide** | | |
| 4.1 | Checking Before Installation | 11 |
| 4.1.1 | Checking Outer Packing Materials | 11 |
| 4.1.2 | Checking Deliverables | 11 |
| 4.2 | Tools | 13 |
| 4.3 | Installation environment requirements | 13 |
| 4.3.1 | Installation carrier requirements | 13 |
| 4.4 | Installation Instructions | 14 |
| 4.4.1 | Dimensions | 14 |
| 4.4.2 | Installation Procedure（Rack Mounted） | 15-16 |
| 4.4.3 | Wiring Steps | 17-18 |
| **5.Commissioning Procedure** | | 19 |
| **6.Maintenance** | | |
| 6.1 Recharge Requirements During Normal Storage | | 20 |
| 6.2 Recharge Requirements When Over Discharged | | 20 |

# 1.Technical Specication




| Product type | Basic-L1 |
|---|---|
| Technical Specification | |
| Battery Model | SDC10-Box5 |
| Battery System Capacity | 5.12kWh |
| Cell Technology | Li-ion(LFP) |
| Battery Cell Capacity | 100Ah |
| Configuration | 1P16S |
| Norminal Voltage | 51.2V |
| Operating Voltage Range | 45.6~56.2V |
| Dimension (W*D*H) | 440*550*130(mm) / 17.32*21.65*5.12(inch) |
| Net Weight | 46 kg (101.41 lb) |
| Scalability | Max. 15 systems in parallel operation |
| Installation | Floor stand (standard) , Wall mounted (optional) |
| Depth of Discharge | 90% |
| Battery System Charge Current(Recommended) | 80A |
| Battery System Charge Current(Max) | 100A |
| Battery System Discharge Current(Recommended) | 80A |
| Battery System Discharge Current(Max) | 100A |
| Cooling Method | Natural convection |
| Communication Port | RS232, RS485, CAN |
| Protection Class | IP20 |
| Environment | Indoor |
| Operating Temperature | 0°C~50°C (32°F~122°F) |
| Shelf Temperature | -20°C~50°C (-4°F~122°F) |
| Humidity | 5%-95% |
| Max. Operating Altitude | 2000m (6,562ft.) |
| Operation Life | 10 years |
| Standard Compliance (more available upon request) | |
| Certificates | IEC62619 / IEC61000 / IEC62040 / CE / UN38.3 |

# 2.Safety Information

## 2.1 General Safety

Please carefully read the manual safety precautions and observe all the safety instructions on the equipment and in this document.

The "DANGER" ， "WARNING", and "NOTICE" statements in this document do not cover all the safety instructions. They are only supplements to the safety instructions.

For user safety and utilization efficiency of this manual, a list of symbols is designed to alert people from danger. You must understand and comply with the emphasized information to avoid personal injury and property damage. Relative safety symbols have been listed below.

| | |
|---|---|
| Danger | DANGER indicates a hazardous situation which, if not avoided will result in serious injury and/or fire. |
| Warning | WARNING indicates a hazardous situation which, if not avoided, will result in property loss and/or void the warranty. |
| NOTICE | NOTICE indicates normal situation which, if not avoided, will result in damage to the battery. |

**NOTICE**

Follow local laws and regulations when installing, operating, or maintaining the equipment. The safety instructions in this document are only supplements to local laws and regulations.

## 2.2 Personal Safety

Personal Requirements

People who plan to install or maintain battery equipment must be trained, understood all necessary safety precautions, and are able to correctly perform all operations.

Only qualified professionals or trained people are allowed to install, operate, and maintain the equipment.



**DANGER**

- Do not place battery in an area accessible by children or pets.
- Do not touch the energized battery, the temperature of the battery enclosure may increase during operation.
- Do not touch the energized battery terminals.
- Do not stand on, lean on, or sit on the battery.

## 2.3 Electrical Safety

Symbols on Battery

There are some electrical symbols on battery relate to electrical safety. Please make sure you have fully understood them before installation.

| | | |
|---|---|---|
|  | Electrical danger | Voltage exits when the battery is powered on. Only qualified engineers are allowed to operate. |
|  | Earth connector | Earth connection. |
|  | DC positive and negative connectors | Identify positive and negative connectors of DC power source. |
|  | CE mark | The product meets CE certification. |
|  | WEEEtag | Batteries must not be disposed with general waste. It must be appropriately recycled in accordance with local regulations. |
|  | Recycle | Batteries can be recycled, please refer to your local regulations regarding the correct disposal methods. |

## Electrical Safety

**DANGER**

- Before installation, ensure that the equipment is intact. Otherwise, electrics hocks or fire may occur.
- Do not connect or disconnect power cables when battery is power-on. Which may cause electric arcs and sparks more over fire or personal injury.
- Before connecting a power cable, check the positive or negative connectors are correct.
- Do not parallel connection with different batteries.
- Do not connect battery with AC directly.
- Do not connect battery with PV wiring directly.
- Do not connect battery to faulty or unqualified inverter or charger.
- Do not create short circuits with the external connection.
- Make sure the grid is cut off and the battery is powered off before maintenance.
- Make sure the earth cable is connected correctly before operation.

**WARNING**

- Recharge battery in every six months if not in use.
- Recharge battery within 10 days after battery is fully discharged(SOC=0%).
- Ensure battery cable is installed correctly.
- When the battery is being installed or repaired, ensure the battery is powered off and and isolated. Using a multimeter check to ensure there is no voltage in the positive and negative terminals.

**CAUTION**

- Please use appropriately insulated tools for installation and maintenance.
- Please check the LED status when the battery is powered on.
- Please ensure the communication cable is connected correctly between the battery and the inverter.
- Please check for inverter alarms and the SOC reading once communication is established between the inverter and the battery.



## Environment Safety

**WARNING**

- Ensure the battery is installed in a dry and well-ventilated location.
- The installation position must be away from direct sunlight and rain.
- The installation position must be far away from potential sources of fire..
- The installation position must be far away from all sources of water.
- Do not install the equipment in locations that contain flammable gases and/or flammable liquids.
- The operation and service life of the battery depends on the operating temperature. Operate the battery at a temperature equal to or better than the ambient temperature. The recommended operating temperature range is from 0°C to 30°C.

## 2.4 Transportation Safety

**WARNING**

- The products have passed UN38.3 certification.
- The products have MSDS documents available.
- The products belong to class 9 dangerous goods.
- **Please protect the packing case from the below situations:**
  - Being dampened by rains, snows, or falling into water.
  - Falling down or mechanical impact.
  - Being upside-down or tilted.

# 3.PRODUCT OVERVIEW

## 3.1 Brief Introduction



PRODUCT OVERVIEW

Basic-L1 is a lithium battery with an operating voltage range between 45.6~56.2V. It is designed for residential energy storage applications and works together with a low voltage hybrid inverter. **Basic-L1 is not suitable for supporting life-sustaining medical devices.**

Basic-L1 has built-in BMS (Battery Management System), which can manage and monitor cells information including voltage, current and temperature. Besides that, BMS can balance cells charging to extend cycle life. BMS has protection functions including over-discharge, over-charge, over-current and high/low temperature; the system can automatically manage charge state, discharge state and balance state.

Multiple Basic-L1 can be connected in parallel to expand capacity and power, 15 Basic-L1 can be connected in parallel at most.

**Note: For multiple batteries in parallel, only the Master battery SOC LED will be on to show the whole system SOC level, slave battery SOC LEDS are off, but the Normal&Alarm LED will show normally.**



## 3.2 Interface Introduction

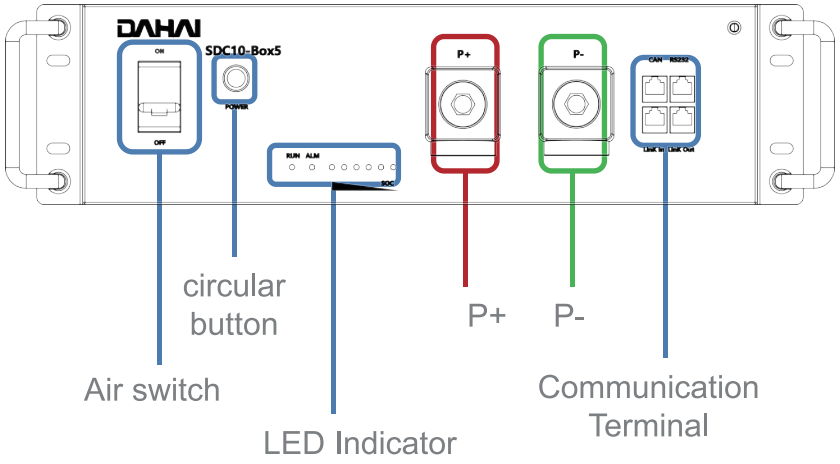


### 3.2.1 Switch ON/OFF

1. Switch ON

For single Battery Module, turn on the air switch, Long press (more than 3 seconds) ON/OFF button, Normal LED will be lighted in the front panel then battery will operate normally. L1 to L6 shows battery SOC, L7/L8 shows battery status.

For multiple Battery Modules in parallel, turn on the air switch of all batteries,long press (more than 3 seconds) ON/OFF button of master battery (Which connect with inverter), normal LED will be lighted,battery system will automatically encode and assign ID to each slave battery, then battery system will operate normally.

2. Switch OFF

For multiple Battery Modules in parallel,turn off the air switch of all batteries,press ON/OFF button of master battery (which connect with inverter) more than 3s, LED will flash in the front panel and then release the button, the master battery will shut down after all slave batteries shut down (Sleep mode).

For single Battery Module,turn off the air switch, Long press (more than 3 seconds) ON/OFF button,LED will flash in the front panel and then release the button, the battery will shut down.

### 3.2.2 LED Indicator Definition

Note:

flash 1 - 0.25s light / 3.75s off

flash 2 - 0.5s light / 0.5s off

flash 3 - 0.5s light / 1.5s off

LED Indicators Instructions

| | | RUN | ALM | Battery Level Indicator | | | | | | |
|---|---|---|---|---|---|---|---|---|---|---|
| Status | | L8 | L7 | L6 | L5 | L4 | L3 | L2 | L1 | Descriptions |
| | | ● | ● | ● | ● | ● | ● | ● | ● | |
| Shut down | | OFF | OFF | OFF | OFF | OFF | OFF | OFF | OFF | All OFF |
| Standby | | Flash 1 | OFF | According to the battery level | | | | | | Indicates Standby |
| Charging | Normal | Light | OFF | According to the battery level | | | | | | The highest capacity indicator LED flashes(flash2),others lighting |
| | Full Charged | Light | OFF | Light | Light | Light | Light | Light | Light | Turn to standby status when charger off |
| | Protection | OFF | Light | OFF | OFF | OFF | OFF | OFF | OFF | Stop charging |
| Discharge | Normal | Flash 3 | OFF | According to the battery level | | | | | | |
| | UVP | OFF | OFF | OFF | OFF | OFF | OFF | OFF | OFF | Stop charging |
| | Protection | OFF | Light | OFF | OFF | OFF | OFF | OFF | OFF | Stop discharge |
| Fault | | OFF | Light | OFF | OFF | OFF | OFF | OFF | OFF | Stop charging and Discharge |

Charging Battery Level Indicators Instructions

| Status | | Charging | | | | | | | |
|---|---|---|---|---|---|---|---|---|---|
| Battery Level Indicator | | L8 | L7 | L6 | L5 | L4 | L3 | L2 | L1 |
| | | ● | ● | ● | ● | ● | ● | ● | ● |
| Battery Level % | 0~17% | Light | OFF | OFF | OFF | OFF | OFF | OFF | Flash 2 |
| | 18~33% | | | OFF | OFF | OFF | OFF | Flash 2 | Light |
| | 34~50% | | | OFF | OFF | OFF | Flash 2 | Light | Light |
| | 51~66% | | | OFF | OFF | Flash 2 | Light | Light | Light |
| | 67~83% | | | OFF | FLASH 2 | Light | Light | Light | Light |
| | 84~100% | | | Flash 2 | Light | Light | Light | Light | Light |
| | Full Charged | | | Light | Light | Light | Light | Light | Light |

Discharging Battery Level Indicators Instructions

| Status | | Discharge | | | | | | | |
|---|---|---|---|---|---|---|---|---|---|
| Battery Level Indicator | | L8 | L7 | L6 | L5 | L4 | L3 | L2 | L1 |
| | | ● | ● | ● | ● | ● | ● | ● | ● |
| Battery Level% | 0~17% | Flash 3 | OFF | OFF | OFF | OFF | OFF | OFF | Light |
| | 18~33% | | | OFF | OFF | OFF | OFF | Light | Light |
| | 34~50% | | | OFF | OFF | OFF | Light | Light | Light |
| | 51~66% | | | OFF | OFF | Light | Light | Light | Light |
| | 67~83% | | | OFF | Light | Light | Light | Light | Light |
| | 84~100% | | | Light | Light | Light | Light | Light | Light |

### 3.2.3 CAN / RS485 Port

CAN / RS485 Communication Terminal (RJ45 port), connect to inverter, follow CAN / RS485 protocol.

| PIN | Definition |
|---|---|
| Pin 1 Pin 8 | RS485-B ( to PCS, reserved ) |
| Pin 2 Pin 7 | RS485-A ( to PCS, reserved ) |
| Pin 3 | NC |
| Pin 4 | CANH ( to PCS ) |
| Pin 5 | CANL ( to PCS ) |
| Pin 6 | GND |

### 3.2.4 RS232 Port

RS232 Communication Terminal (RJ45 port) follow RS232 protocol, for manufacturer or professional engineer to debug or service.

| PIN | Definition |
|---|---|
| Pin 1 Pin 8 | GND |
| Pin 2 Pin 7 | RS232_TX |
| Pin 3 Pin 6 | RS232_RX |
| Pin 4 Pin 5 | NC |

# 4.INSTALLATION GUIDE

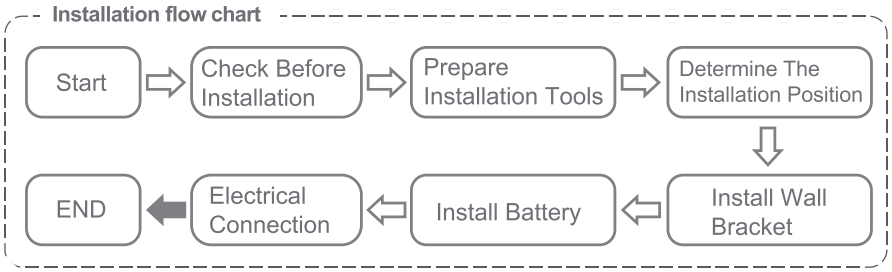


## 4.1 Checking Before Installation

### 4.1.1 Checking Outer Packing Materials

Packing materials and components may be damaged during transportation. Therefore, check the outer packing materials before installing the battery. Checking the surface of packing materials for damage, such as holes and cracks. If any damage is found, do not unpack the battery and contact the dealer as soon as possible.

### 4.1.2 Checking Deliverables

After unpacking the battery, check whether deliverables are intact and complete. If any damage is found or any component is missed, contact the dealer.

The below table shows the components and mechanical parts that should be delivered.

| NO. | Part name/size | Quantity | Photo | Used for |
|---|---|---|---|---|
| 1 | Battery pack | 1 |  | |
| 2 | Stacking brackets | 4 |  | Stacking brackets |
| 3 | Power cord, SC25-8 at one end, SC25-10 at the other end, AWG4# silicone wire 3512, L=1500mm, Black color | 1 |  | output cable- |
| 4 | Power cord, SC25-8 at one end, SC25-10 at the other end, AWG4#silicone wire 3512, L=1500mm, Red color | 1 |  | output cable+ |
| 5 | Cross countersunk head screws_thin head_M5*8mm_8.8 grade 304 stainless steel | 12 |  | To lock stacking bracket |
| 6 | Super five categories_ RJ45 shielded crystal head | 4 |  | To remake the communication cable's crystal head when necessary. |
| 7 | V1.0_ RJ45 crystal plug_ Black Super Class 5 Unshielded_ T568B color line sequence_ Line length 160mm_ RJ45 crystal plug | 1 |  | Communication cable for parallel of multiple packs |
| 8 | V1.0_ RJ45 crystal plug_ Black Super Class 5 Unshielded_ Customized wire sequence 4 on 4_ 5 on 5_ Line length 2000mm_ RJ45 crystal plug | 1 |  | Communication cable between master pack and inverter |
| 9 | Red Nylon Tube Terminal_VE25-25_Purple Copper with Tin Plating | 1 |  | Accessory terminals |
| 10 | Black Nylon Tube Terminal_VE25-25_Purple Copper with Tin Plating | 1 |  | Accessory terminals |
| 11 | Flat gasket M8 * 20 * 1.5mm_8.8 grade 304 stainless steel | 2 |  | Accessory gasket |
| 12 | SC35-8_Purple Copper Tinned Terminals | 2 |  | Accessory terminals |
| 13 | SC25-8_Purple Copper Tinned Terminals | 2 |  | Accessory terminals |
| 14 | Yellow-green two-color grounding Cable | 1 |  | Grounding Cable |
| 15 | Screw<br>Cross outer hexagon three combination screws_M6*12mm_8.8 grade 304 stainless steel | 1 |  | Grounding screw |
| 16 | Outgoing Inspection Report | 1 |  | Outgoing Inspection Report |
| 17 | 2g moisture-proof desiccant | 2 |  | Moisture-proof |

## 4.2 Tools

| Tools | | | |
|---|---|---|---|
| Installation | Knife  | Measuring tape  | Socket wrench（10/16mm）  |
| | Rubber mallet  | Cross Screwdriver  | Hammer drill（12mm）  |
| Protection | ESD gloves  | Safety goggles  | Anti-dust respirator  |
| | Safety shoes  | | |

## 4.3 Installation environment requirements

- Install the battery in the indoor environment.
- Place battery in secure location away from children and animals.
- Do not place the battery near any heat sources and avoid sparks.
- Do not expose the battery to moisture or liquids.
- Do not expose the battery to direct sunlight.

### 4.3.1 Installation carrier requirements

- Only mount battery on fire resistant building. Do not install batteries on flammable buildings.
- Battery is quite heavy, make sure the wall/ground can meet the load bearing requirements.



## 4.4 Installation Instructions

### 4.4.1 Dimensions

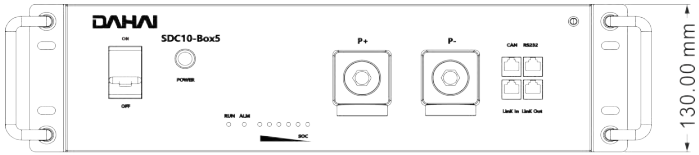


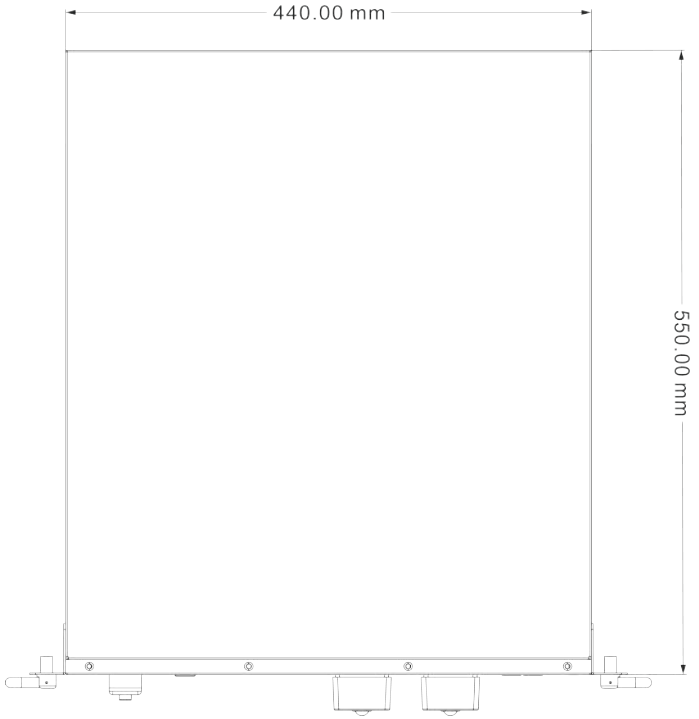

## 4.4.2 Installation Procedure（Rack Mounted）

### STEP 1

Remove the Handles from the battery.

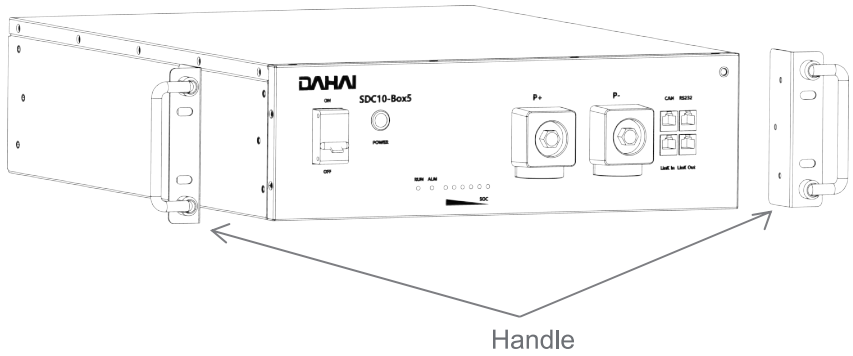


### STEP 2

Install Stacking brackets at the four corners of the battery.

Stacking brackets(M4*8)

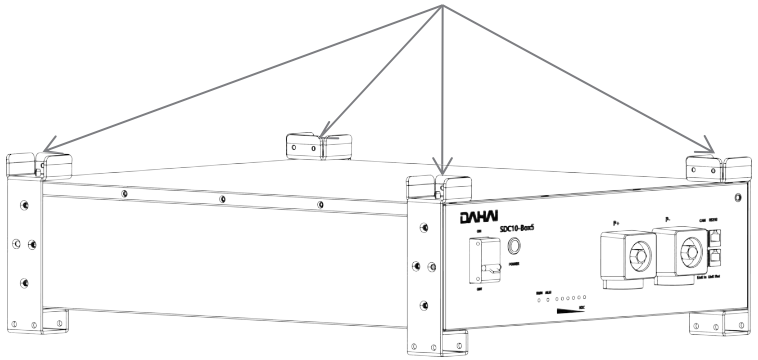

### STEP 3

The battery with the Stacking brackets is stacked like below.

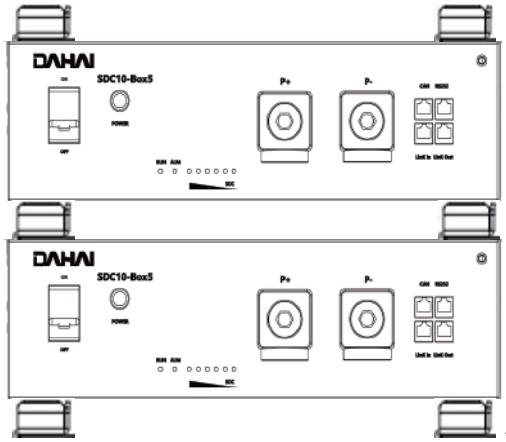

## 4.4.3 Wiring Steps

### STEP 1

Connected to ground.

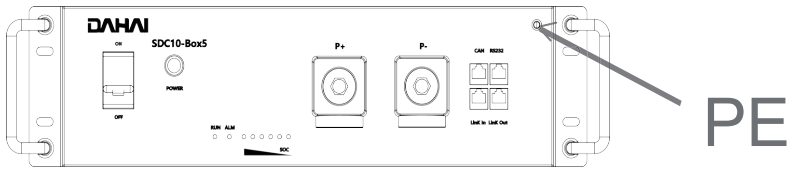


### STEP 2

Connecting power cables.

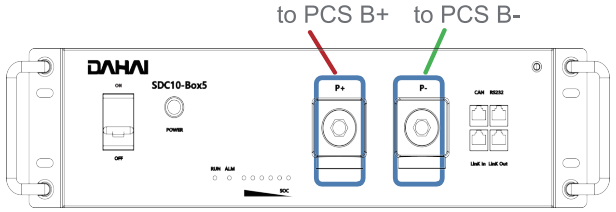


### STEP 3

Connect the communication cable.

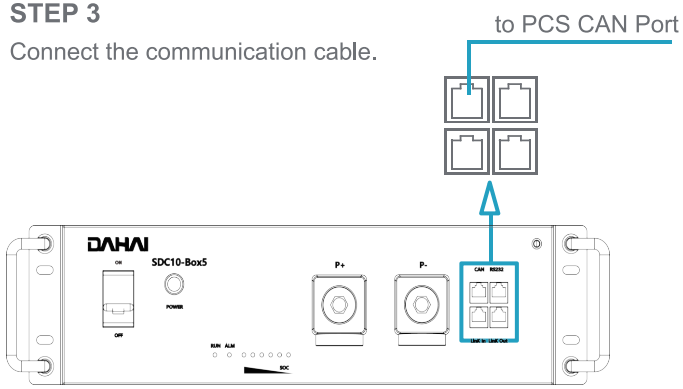




### STEP 4

When multiple batteries are connected in parallel, follow the following wiring mode.

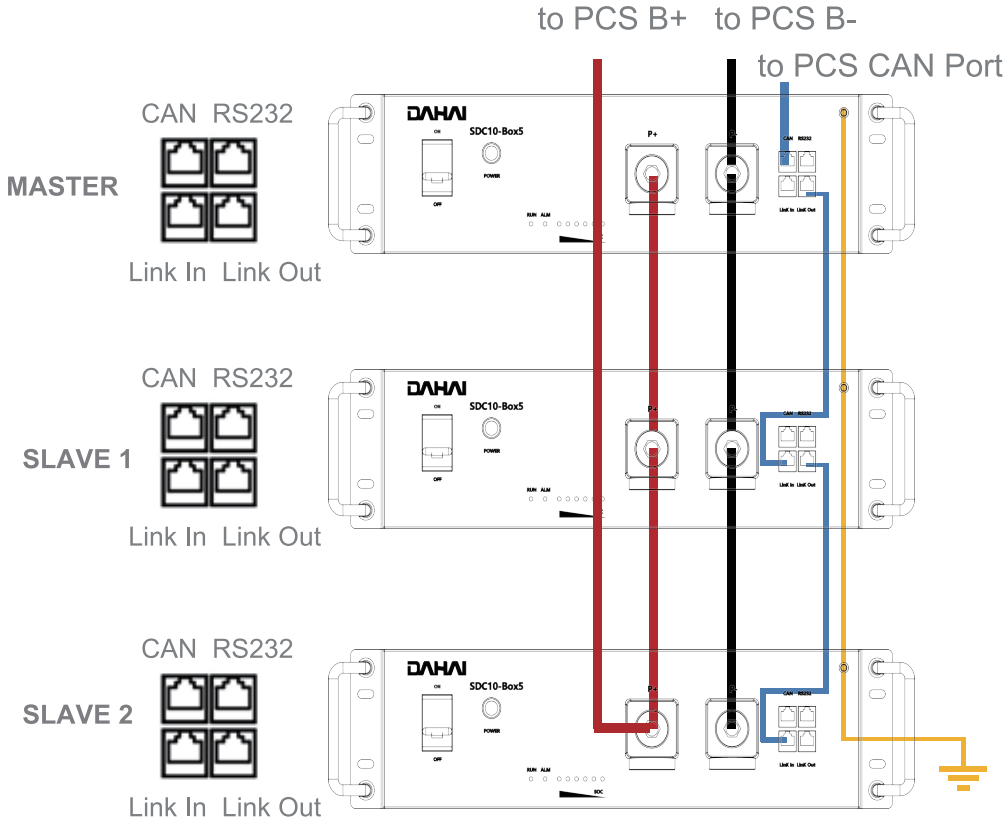

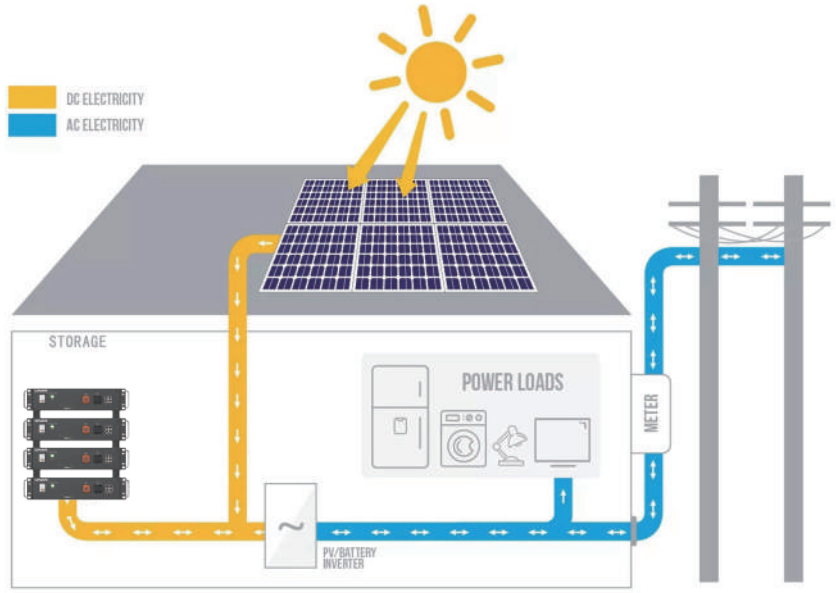


# 5. Commissioning Procedure

After all the cable (power and communication) connections are completed, please ensure the following:

- Ensure the DC switch on the inverter is OFF
- Ensure the AC switch that is connected to the grid and EPS output (if used) of the inverter is OFF
- Ensure the DC switch is OFF

For commissioning we recommend the following steps:

- Turn the DC switch ON
- Refer to section 3.2.1 Start for turning on the battery
- Wait until the LED´s on
- Wait until the inverter LED´s on
- Turn the DC switch on the inverter ON
- Turn the AC switch that is connected to the grid and EPS output of the inverter ON
- Set-up the battery and the inverter using the App

# 6.MAINTENANCE

## 6.1 Recharge Requirements During Normal Storage

Battery should be stored in an environment with temperature range between -10°C ~+45°C, and maintained regularly according to following table with 0.5C (50A) current till 50% SOC after long storage time.

**Recharge Conditions When In Storage**

| Storage Environment Temperature | Relative Humidity of Storage Environment | Storage Time | SOC |
|---|---|---|---|
| Below -10℃ | / | prohibit | / |
| -10~25℃ | 5%~70% | ≤12 months | 30%≤SOC≤60% |
| 25~35℃ | 5%~70% | ≤6 months | 30%≤SOC≤60% |
| 35~45℃ | 5%~70% | ≤3 months | 30%≤SOC≤60% |
| Above 45℃ | / | prohibit | / |

## 6.2 Recharge Requirements When Over Discharged

Over discharged (90% DOD) battery should be recharged according to following table, otherwise over discharged battery will be damaged.

**Recharge conditions when battery is over discharged**

| Storage Environment Temperature | Storage Time | Note |
|---|---|---|
| -10~25℃ | ≤15 days | Battery Pack disconnected from PCS |
| 25~35℃ | ≤7 days | |
| -10~45℃ | <12 hours | Battery Pack connected to PCS |